LEYMAN
LIFT GATES

OPERATIONS MANUAL

Patriot™ LPR® 4500

Hide-A-Way® Trailer Rear Lift Gate (Slider)

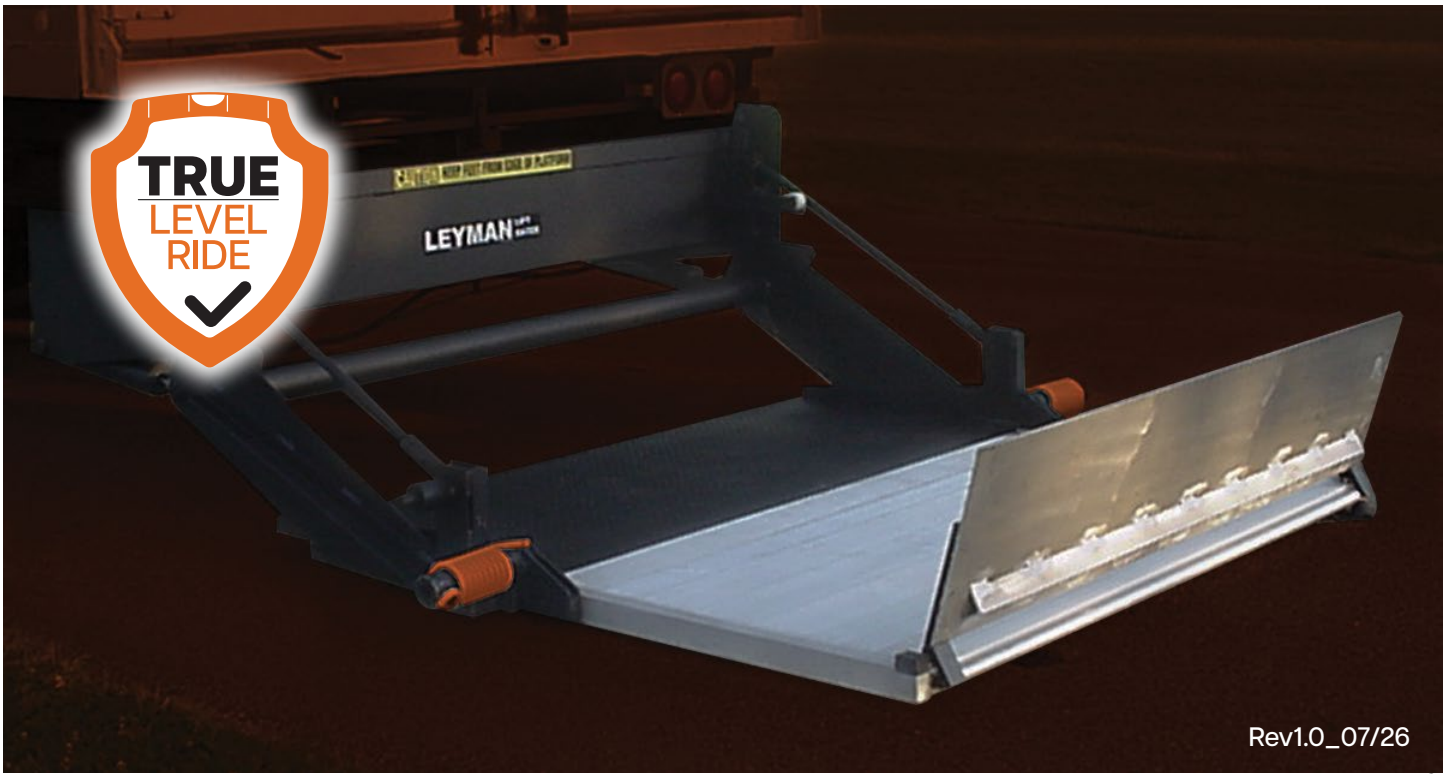

Rev1.0_07/26

Table of Contents

SECTION 1 – Specifications

General Terminology 1.1
General Specification 1.2
Installation of Safety Decals 1.3
Recommended Hydraulic Oils/Lubrication 1.4

SECTION 2 – Operations

Lift Gate Operating Instructions 2.1
Emergency Hand Pump Operation 2.2

SECTION 3 – Maintenance

Preventive Maintenance Schedule 3.1
Grounding Recommendation For Tractor/Trailer 3.2
Installation Adjustments 3.3-3.4

SECTION 4 – Diagrams

Circuit Breaker Diagrams 4.1
Wiring Diagram 4.2
Power Unit Replacement Parts (Monarch) 4.3
Hydraulic - Interior Replacement Parts 4.4
Hydraulic - Bottom-Side Replacement Parts 4.5
Replacement Bearings, Shafts, Misc. 4.6-4.7
Chain Area Replacement Parts 4.8
Emergency Pump Parts (Optional) 4.9-4.10
Retention Ramp Parts LPR4500RB 4.11-4.12
Retention Ramp Parts LPR45RBSR 4.13-4.14
Side Ramp Parts 113LPRCURBSIDE1 ..... 4.15
Basic Electrics - Replacement Parts 4.16
STD Toggle Switch Wiring 4.17
Toggle Switch Wiring with Pushbutton. 4.18
Emergency Hand Pump (184LPR) 4.19

SECTION 5 – Troubleshooting

Symptom / Remedies 5.1
Electric and hydraulic schematicS/MM2® 5.2
Ground Wires 5.3
Condition / Recommended Action 5.4-5.10
Notes 5.11

LEYMAN

LIFT GATES

SPECIFICATIONS

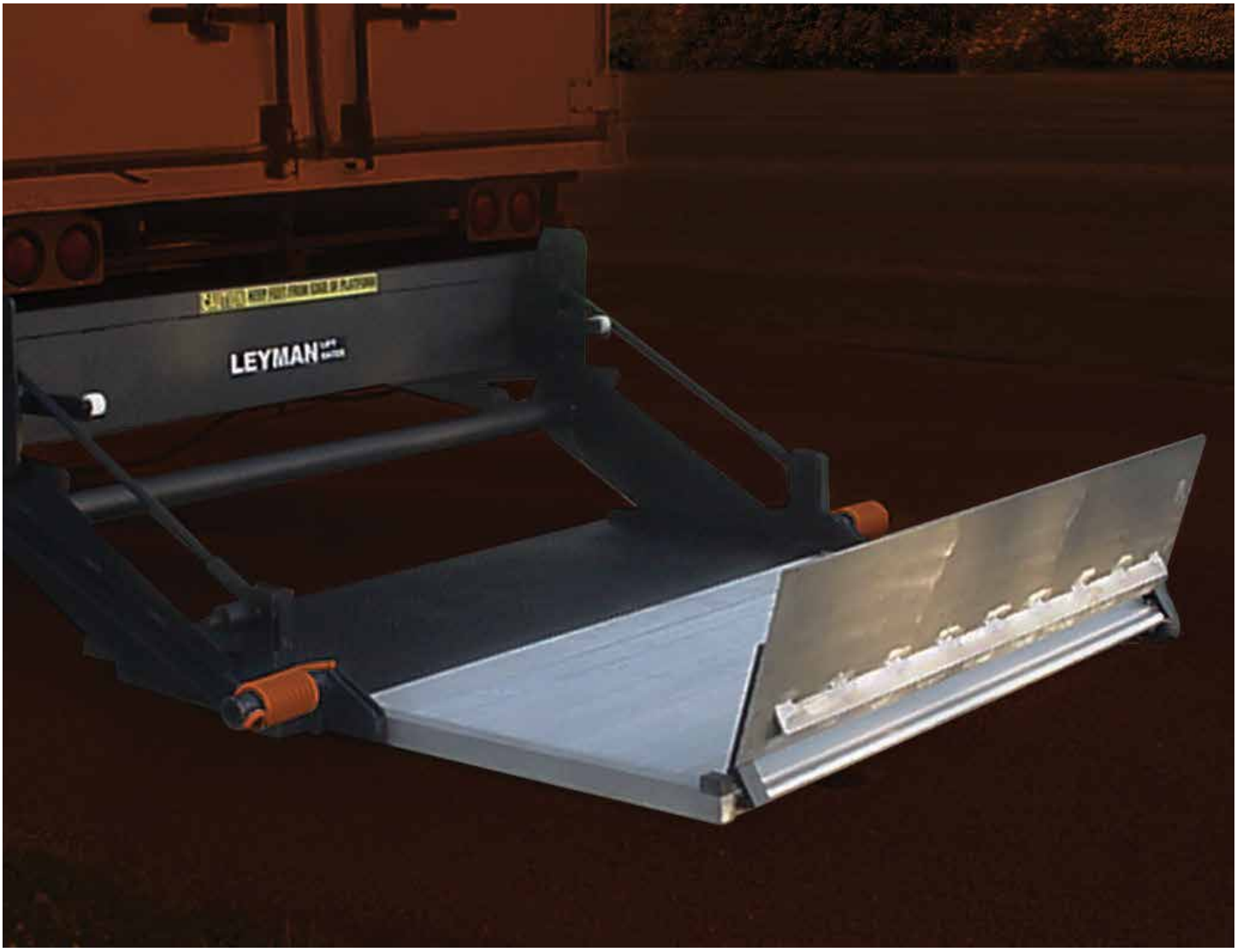

GENERAL TERMINOLOGY

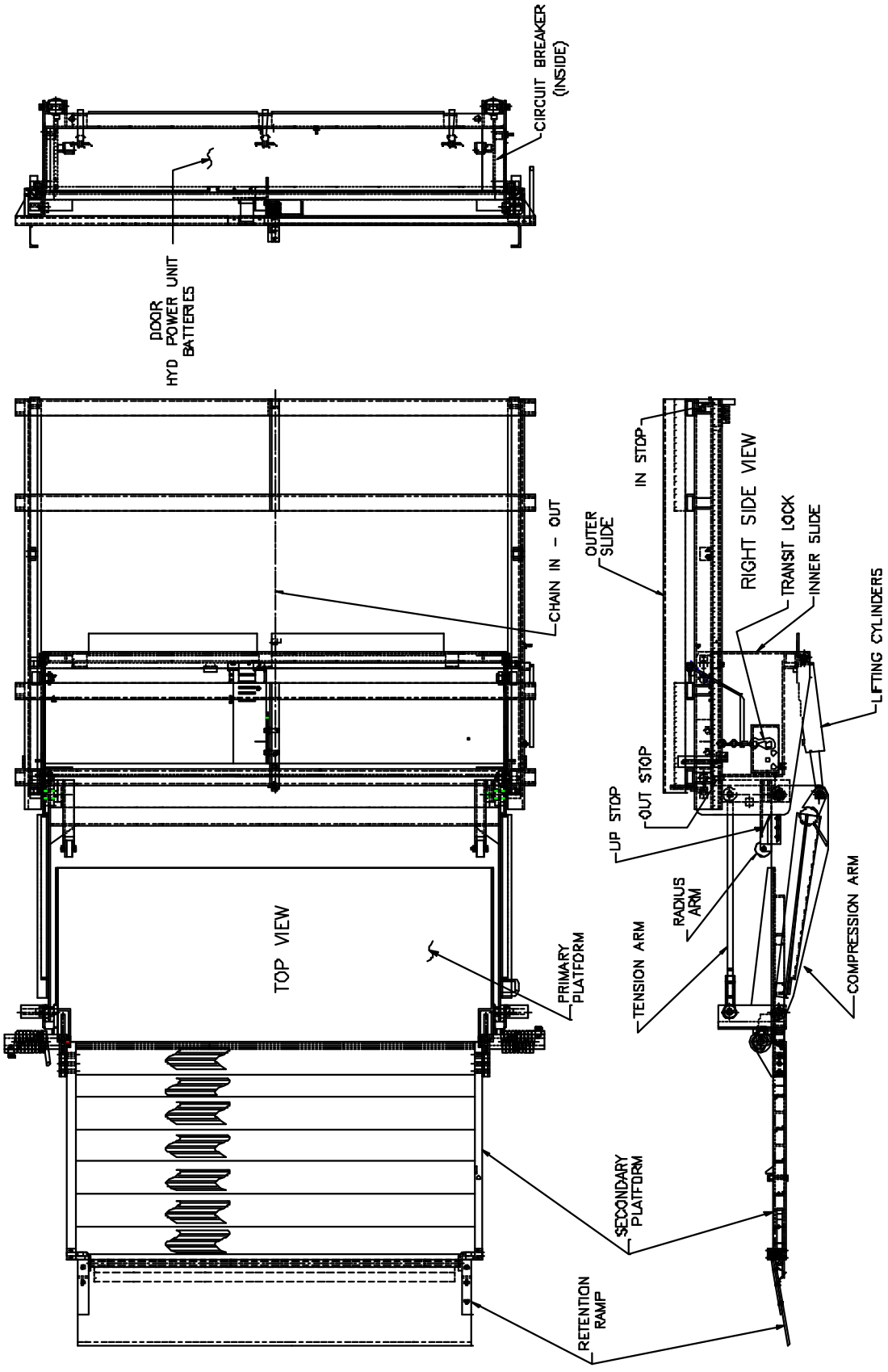

GENERAL SPECIFICATIONS

CUSTOMER: _____
MODEL: LPR_____
SERIAL #:
CAPACITY: 4500 lbs.
TYPE: Trailer Rear Door Lift Gate
OPERATION: Power up/Gravity down
Power in/out
HYDRAULIC PRESSURE: 2500PSI – Up Function
800PSI – In/Out Function

Model Number	Lifting Capacity	Platform Size	Main Platform	Secondary Platform	Ramp	Vehicle Width	Approx. Weight
LPR 4500	4,500 lbs.	80" W x 72" D	32" D Steel	40" D Aluminum	16" Retention	102"	1,825 lbs.

INSTALLATION OF SAFETY DECALS

Leyman Manufacturing will replace safety stickers at any time **FREE OF CHARGE**.

P55438	Operating Instructions	Loc. A (Qty. 1)
P55157	Urgent Warning….	Loc. A (Qty. 1)
P55294	CAUTION Do Not Stand….	Loc. A (Qty. 1)
P55193	Maximum Capacity	Loc. A (Qty. 1)
AP-011-213	IN – OUT Decal	Loc. B (Qty. 1)
P55347	CAUTION Pinch Point	Loc. C (Qty. 2)
P55157	Urgent Warning….	Loc. D (Qty. 1)
P55221	UP / DOWN Switch	Loc. D (Qty. 2)
P55138	Keep Feet….	Loc. E (Qty. 1)
P55441	Primary Platform at Stored….	Loc. E (Qty. 1)

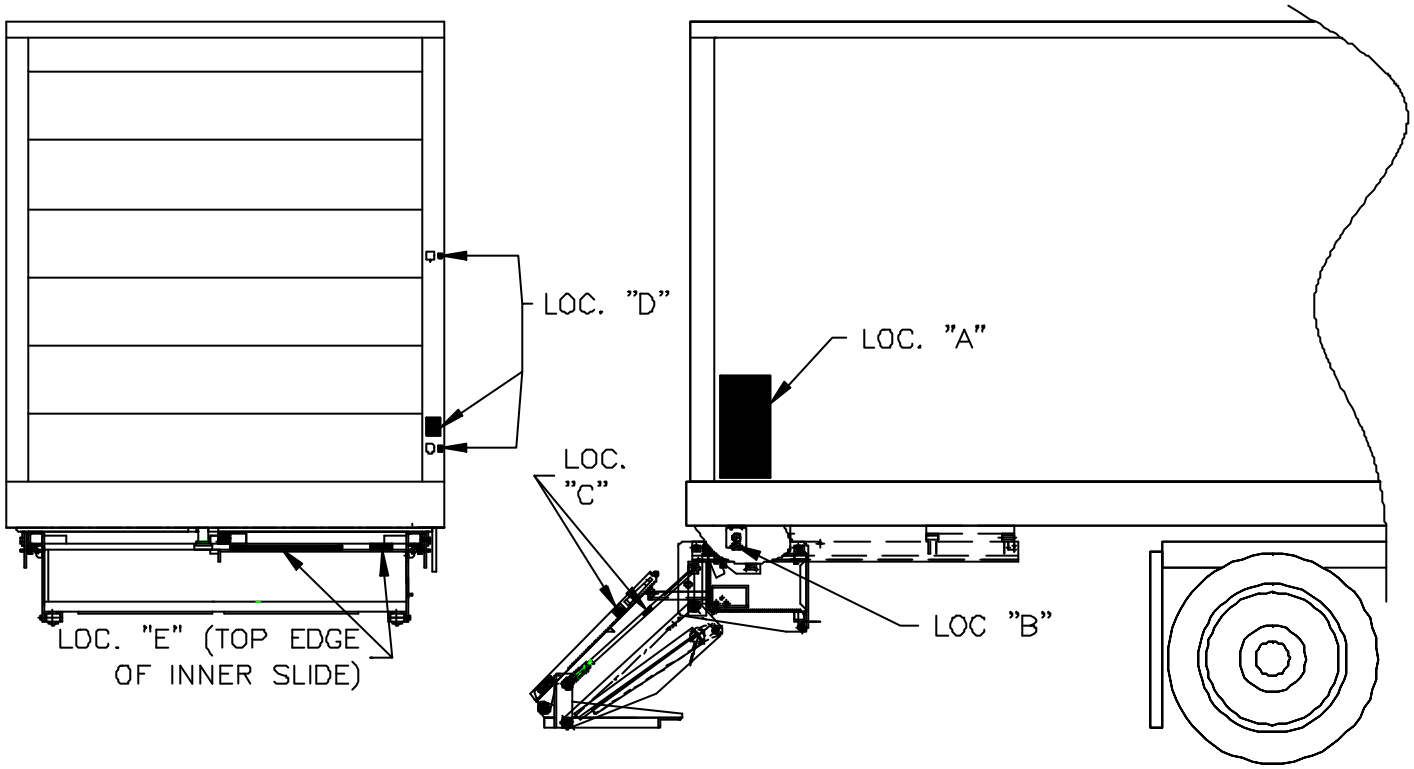

RECOMMENDED HYDRAULIC OILS/LUBRICATION

HYDRAULIC OILS	MANUFACTURER	TYPE	TEMP RANGE
Level 1 Normal Conditions	Mobil	DTE 11	-15° F to + 150° F
	Shell	TELLUS-T15	-15° F to + 150° F
	Exxon	UNIVIS-N15	-15° F to + 150° F
Level 2 Cold Conditions	Mobil	AERO-HFA	-50° F to + 80° F
	Shell	AERO FLUID #4	-50° F to + 80° F
	Exxon	UNIVIS-HVI13	-50° F to + 80° F
	Mil	H-5606	-50° F to + 80° F

HYDRAULIC TANK CAPACITY
2 ½ gallons

LUBRICATION - GREASE	
Cam Rollers, Idler Sprockets, Full-Out Position Lock shaft, Cylinder base pin	**Level 1** Normal Conditions NLGI #2 Lithium base grease **Level 2** Cold Conditions NLGI #1 Lithium base grease **DO NOT USE CHASSIS or 5th WHEEL GREASE**

BATTERIES
Two (2) 12-Volt DC Group 31 Heavy-Duty Dual Purpose or AGM
ELECTRICAL COMPONENTS CONNECTIONS
Use Fluid Film Rust & Corrosion Protection by Eureka, except on Start Solenoid. On Start Solenoid, use Color Guard by Loctite, or Liquid Electrical Tape
AMPERAGE DRAW OF MOTOR
When raising platform (empty) approximately 115 AMPS @ 13.5 volts. At bypass approximately 235 AMPS @ 13.5 volts
LIFTING PRESSURE SETTING
With platform at floor level and pump in bypass 2500PSI
IN-OUT PRESSURE SETTING
When sliding gate in-out and pump in bypass 800PSI
MINIMUM VEHICLE FLOOR HEIGHT LADEN
See page 1.2 for Ground Clearance calculation
MAXIMUM VEHICLE FLOOR HEIGHT UNLADEN
See page 2.3 for Emax values
APPROXIMATE TIMES EMPTY AT 80° F WITH 2 GROUP 31 BATTERIES
Time up: 14 – 18 seconds, Time down(gravity down): 12 –16 seconds

WARNING

The use of a battery charger as the sole power source to operate the lift gate is unauthorized and will prevent the lift gate from working properly. The lift gate must always be operated in conjunction with at least one (1) 12 volt heavy duty lift gate battery. A minimum of 9.5 volts must be maintained in order for the DOWN valve and 10.5 volts for the IN / OUT valves to operate.

LEYMAN
LIFT GATES

OPERATING

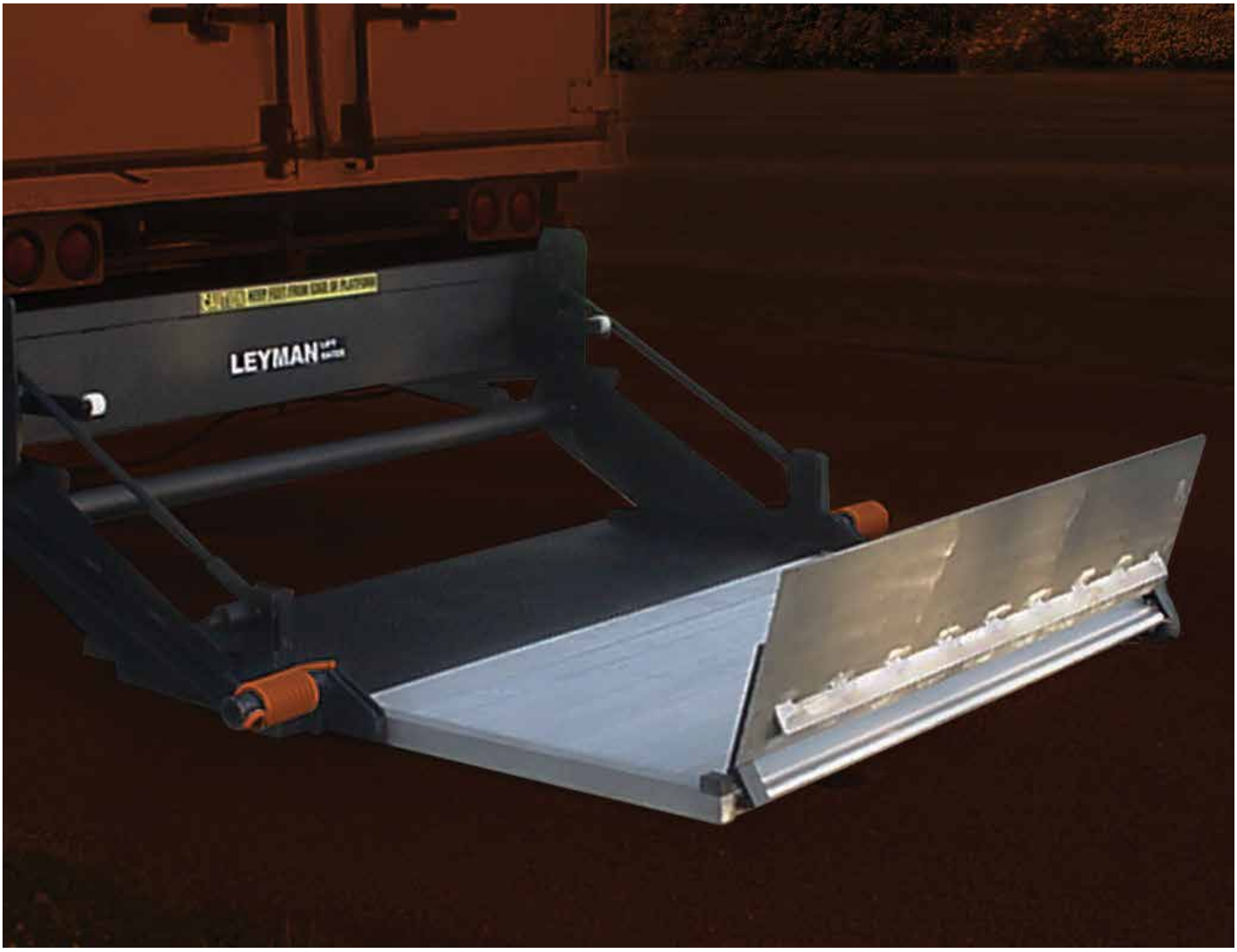

LIFT GATE OPERATING INSTRUCTIONS

Do not stand behind lift gate while unfolding or using platform.

To unfold platform from over-the-road position

1. To relieve tension on safety chain, push the up Switch. Gate will go up.
2. Remove safety chain from hook on curb side of lift.
3. Use down switch to lower lift several inches.
4. Stand to side of lift gate. Push the in / out Switch to the left, and gate will run out. Run gate out until it stops and locks in its Fully extended position.
5. Lower platform to ground using down Switch. Unfold secondary platform.

Safe loading of platform

1. Retention ramp must be set vertical whenever loading platform for lowering, or after loading platform for lifting. See urgent warning decal.

To lower platform, use the down switch only.

To raise platform, use the up switch only.

To store gate in over-the-road position:

1. Position platform near ground. Fold retention ramp and latch
2. Fold secondary platform, then raise platform one foot off the ground.
3. Raise lock bar handle and push the in / out switch to the right. Run gate all the way under trailer until lift stops.
4. Run gate up. Use up switch.
5. Hook safety chain on curb side of lift gate.
6. Lower gate until chain is tight. Use down switch.

EMERGENCY HAND PUMP OPERATION

If an emergency hand pump was supplied with this lift gate, its intended use is to restore the gate to the transit position.



WARNING

Do not try to operate the power unit when using the hand pump.

Steps to secure the gate, so the trailer can be moved:

1. Access cover for Emergency Hand Pump is located on the driver's side of the lift gate. Loosen wing nuts and remove cover. If there is no access cover, or the cover is not removable, then the optional Emergency Hand Pump was not supplied.
2. Remove the pump handle from the holder and insert into the hand pump socket.
3. Raise the platform off the ground about 6". Pump side-to-side.
4. To retract the gate, disconnect the IN/OUT chain and manually push the gate under the trailer all the way until it stops.
5. Pump the gate until fully up. Then hook the Safety Chain on the curb side.
6. With the handle, unscrew the valve on the bottom of the hand pump. This will let the gate down so the Safety Chain is tight.

LEYMAN
LIFT GATES

MAINTENANCE

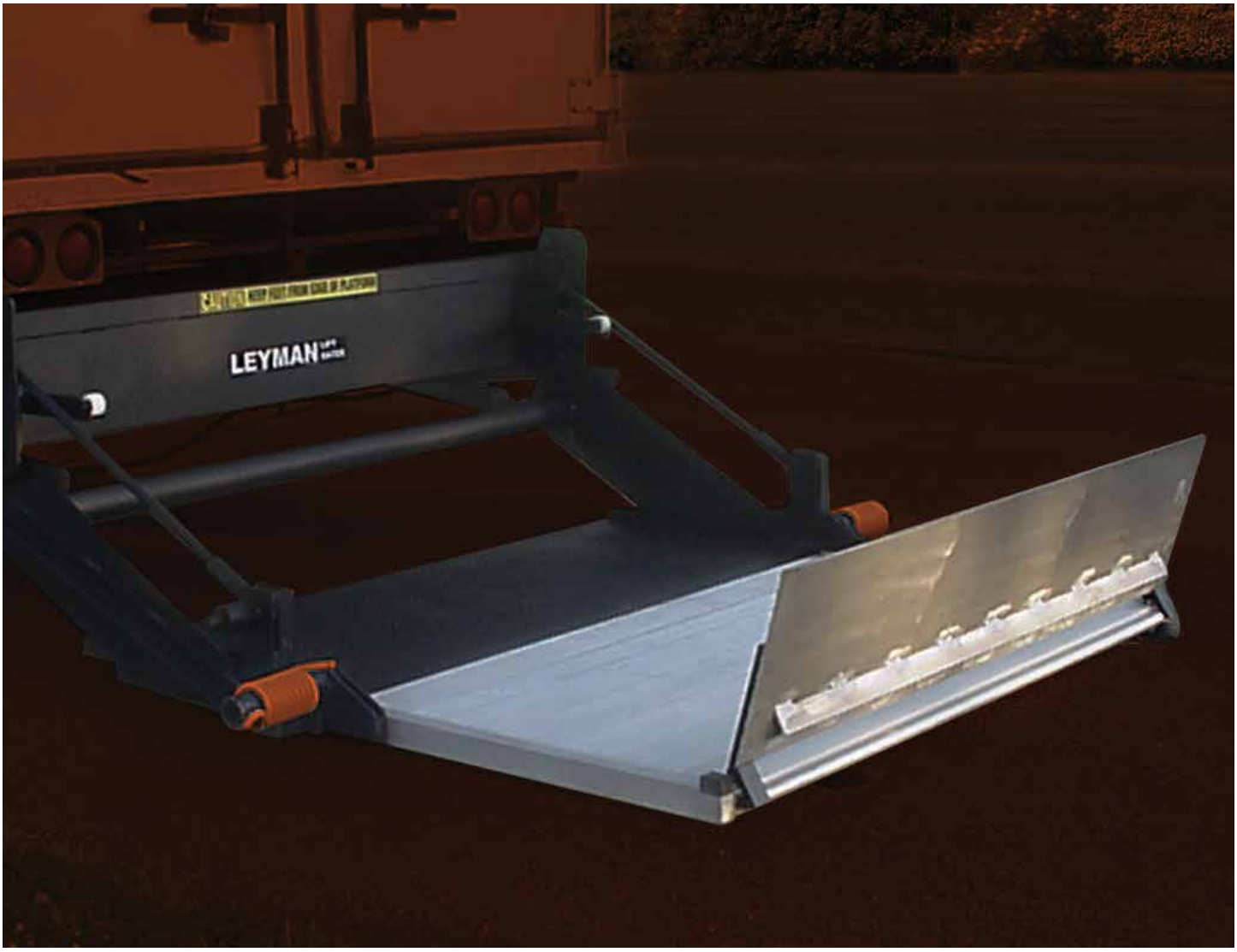

PREVENTIVE MAINTENANCE SCHEDULE

MAINTENANCE by CYCLES for PREMIER™ LPS MODELS **Date:**_____

Customer		Gate Model #	
Location		Gate Serial #	
Vehicle #		Serviced By	

√ = OK X = Repair A = Adjusted N = Not Applicable

3000	MOTOR / PUMP COMPONENTS	3000	MOTOR / PUMP COMPONENTS
	Check batteries for corroded, loose or broken connections		Check charge line/power line for corroded, loose or broken connections at both ends
	Check batteries for proper voltage level and charging		Check amp draw of motor with fully charged batteries and tight clean connections
	Check all wiring in pump box for corroded, loose or broken connections		Check all ground wires for corroded, loose or broken connections
	Check solenoid valves for proper operation		Check pressure setting of relief valves
	Check reservoir for proper oil level (Gate down on the ground, fluid level should be 1" from top of tank)		Clean all wiring connections in pump and battery box. Spray with Fluid Film Corrosion Protection by Eureka. Use Color Guard or Liquid Electrical Tape on Start Solenoid.
	Inspect circuit breakers and fuses for proper operation		Check emergency hand pump for proper operation if equipped.
	Check all fittings/hoses in power unit for tightness and leaks		Check hydraulic motor sprockets for worn bushings and proper operation

3000	STRUCTURAL COMPONENTS	3000	STRUCTURAL COMPONENTS
	Check for correct operation of the gate UP, DOWN, IN, and OUT.		Check IN/OUT chain for proper adjustment (no more than ½" play)
	Check wiring harness on side of gate for chaffed, frayed, or broken wires.		Check all pivot points for loose, broken, or missing roll pins
	Check wiring harness on side of gate for loose, broken, or missing clamps.		Check UP stops for proper positioning of the platform and adjust as needed.
	Check the ground cable on side of gate for loose or corroded connections.		Check the IN/OUT stops for loose, broken, or missing hardware
	Check hydraulic cylinders for leaks		Check all warning lights for proper operation if equipped
	Check hydraulic cylinder pins for loose, broken, or missing roll pins.		Check rollers for proper operation
	Check Auto Lock mechanism for proper operation. Lubricate and adjust as needed.		Check over-all gate for damage or broken welds and repair as needed.
			Check Compression and Tension Arms for worn bushings

3000	LUBRICATION	12000	PERIODIC CHECK LIST
	Stainless Steel Chain should not require any lubrication. Lubricate Idler Sprockets, Auto-Lock shaft, Cam Rollers, and Cylinder Pins at base end. **Level 1** Normal Conditions NLGI #2 Lithium base grease **Level 2** Cold Conditions NLGI #1 Lithium base grease **DO NOT USE CHASSIS or 5th WHEEL GREASE**		Check all pivot point bushings for wear or damage
			Check hydraulic motor sprockets for worn bushings and proper operation.
		15000	PERIODIC CHECK LIST
			Flush hydraulic system and change hydraulic oil
			Clean and repaint as necessary

MAINTENANCE MINDER2® (IF EQUIPPED) READINGS MENU 2

Screen 1 # Lifts	Screen 3 Service Faults	Screen 4 Low Voltage Faults	Screen 6 High Temperature Faults

GROUNDING RECOMMENDATION FOR TRACTOR/TRAILER

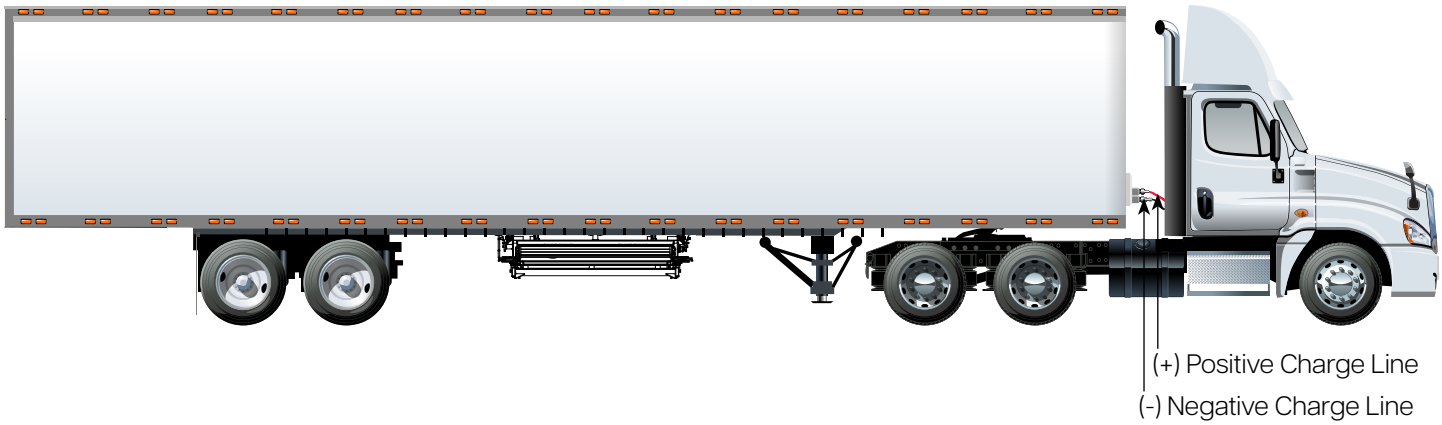

The Maintenance Minder 2® Controller (if equiped) requires a minimum of 10 volts to start and 8 volts to continue running the **Patriot™ LPR®** lift gate. Power unit solenoid valves will require 10.5 volts to operate the coils. Utilization of a single positive cable often does not provide a sufficient ground for the charging circuit. Therefore, our recommendation for grounding tractor/trailers with the **Patriot™ LPR®** gate is as follows:

Two (2) cables: one (1) positive and one (1) negative, both running to the tractor batteries.

NOTE

The use of a battery charger as the sole power source to operate a **Patriot™ LPR®** is unauthorized and will prevent the **Patriot™ LPR®** from working properly. The lift gate must always be operated in conjunction with at least one (1) 12 volt heavy-duty dual purpose or AGM lift gate battery. A minimum of 10.5 volts must be maintained in order for the valves to operate.

INSTALLATION ADJUSTMENTS

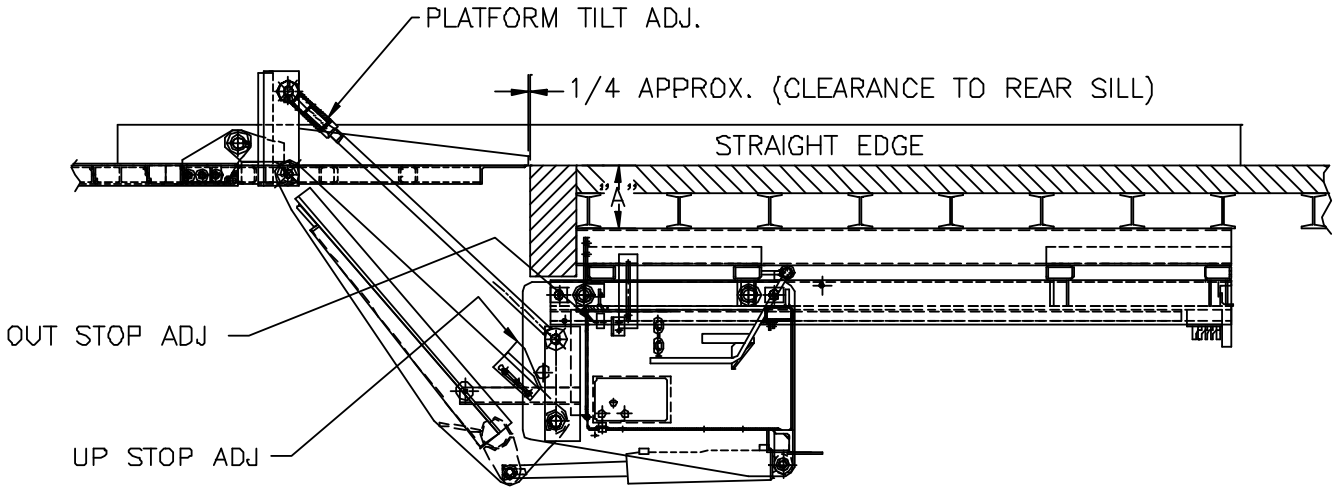

Step 1: The platform was preset at the factory to be level to the floor of the trailer within 1/4". A slight slope toward the trailer is preferred over a slope away from the trailer. With a straight edge, check this. If it is okay, proceed to Step 2. If not, let the platform down to the ground. Remove the two (2) roll pins and the top Tension Arm pivot pins (one on each side).

NOTE

One-half turn moves the tip of the platform 3/16" (turning the end in moves the retention ramp end of the platform up, un-screwing moves the retention ramp end of the platform down). Make necessary adjustments. Replace pins, raise the platform up and check. Repeat if necessary. Replace roll pins.

NOTE

Each side must be adjusted the same amount.

Step 2: Adjust the Up Stops. Platform should be even with the floor of the trailer. Tack weld.

Step 3: Adjust the Out Stops (long set screws with locking nuts). The tip of the platform should be approximately 1/4" from the edge of the threshold.

INSTALLATION ADJUSTMENTS – cont.

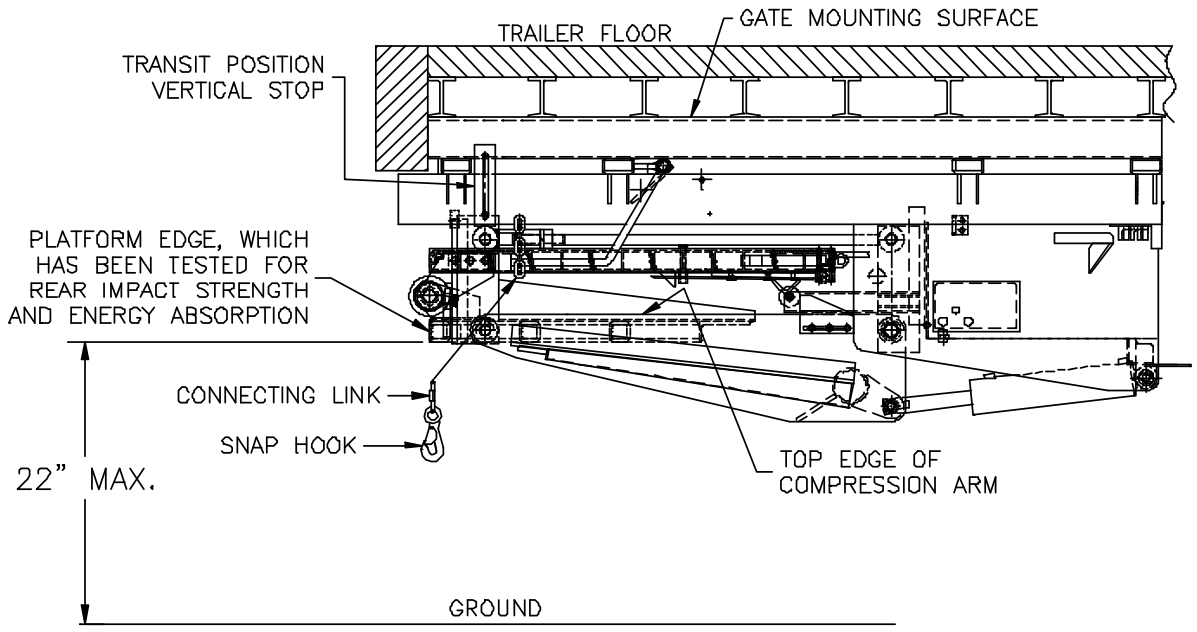

NOTE

A trailer with a rear mounted slider lift gate meets the definition of a "Special Purpose Vehicle", and therefore is exempt from meeting FMVSS 223 and 224 Rear Impact Guard regulations. However, the LPR4500RB lift gate assembly has been tested and does meet all the strength and energy absorption requirements of FMVSS 223 (USA) and CMVSS 223 (Canada). To properly utilize this feature, the steel platform in the stored position must comply with the maximum height restriction (22") for a Rear Impact Guard

Step 1: If the Rear Impact Guard feature is to be utilized, adjust the Transit Position Vertical Stops on both sides such that the steel platform edge meets the 22" MAXIMUM dimension. If the Rear Impact Guard feature does NOT need to be utilized, adjust the Transit Position Vertical Stops on both sides so that the top edge of the Compression Arm is horizontal, with the gate powered UP against the Vertical Stops. This will give maximum ground clearance at the rear of the lift gate.

Step 2: Weld each Transit Position Stop in place with at least four (4) 3/16" fillet welds, 1" long.

Step 3: Adjust length of Safety Chain on curb side. With gate against Transit Position Vertical Stops, and Connecting Link and Snap Hook latched to loop on Compression Arm, determine the minimum number of chain links required. Remove excess links from the end of the chain, then attach Connecting Link and Snap Hook to the end of the chain.

LEYMAN
LIFT GATES

DIAGRAMS

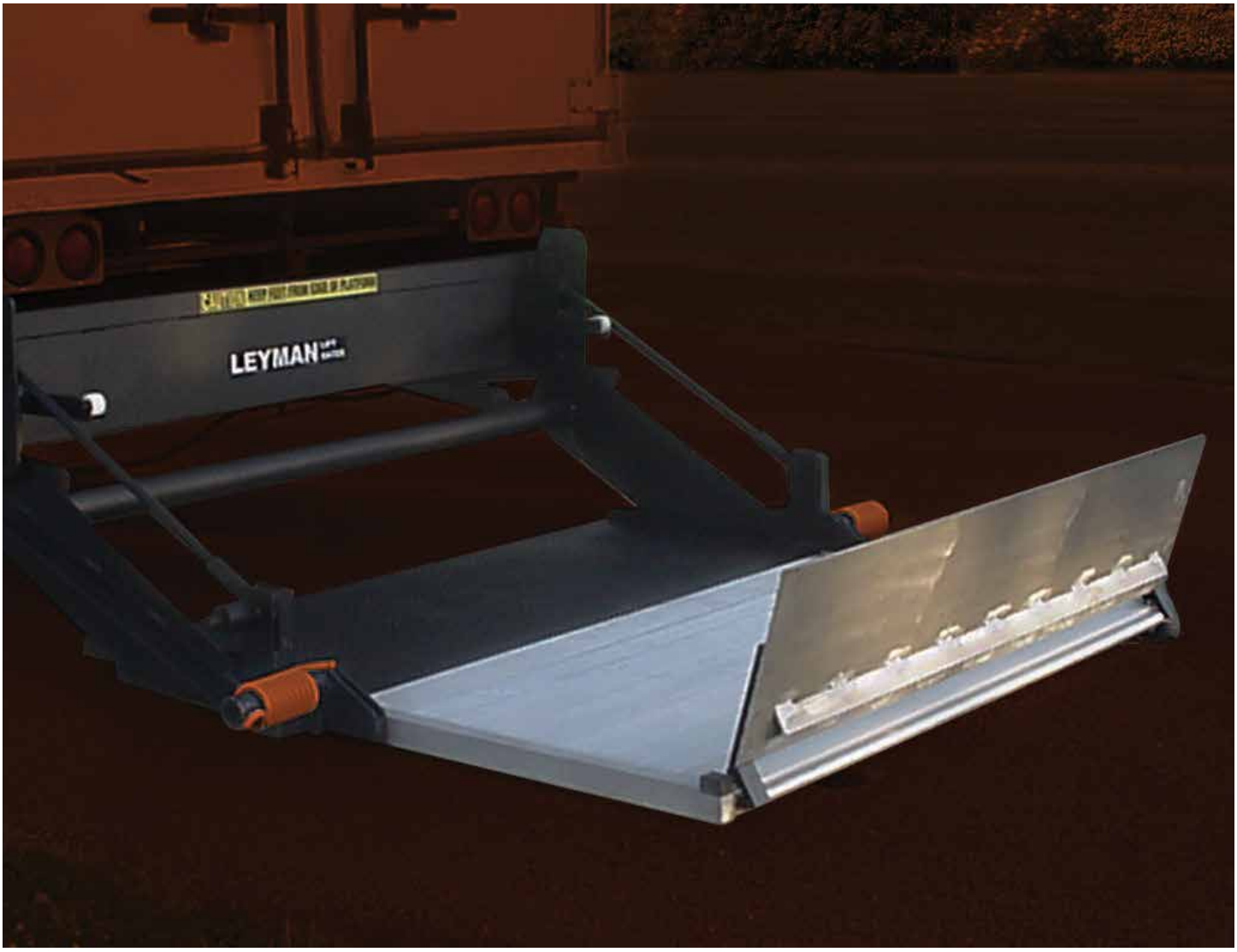

CIRCUIT BREAKER WIRING DIAGRAM

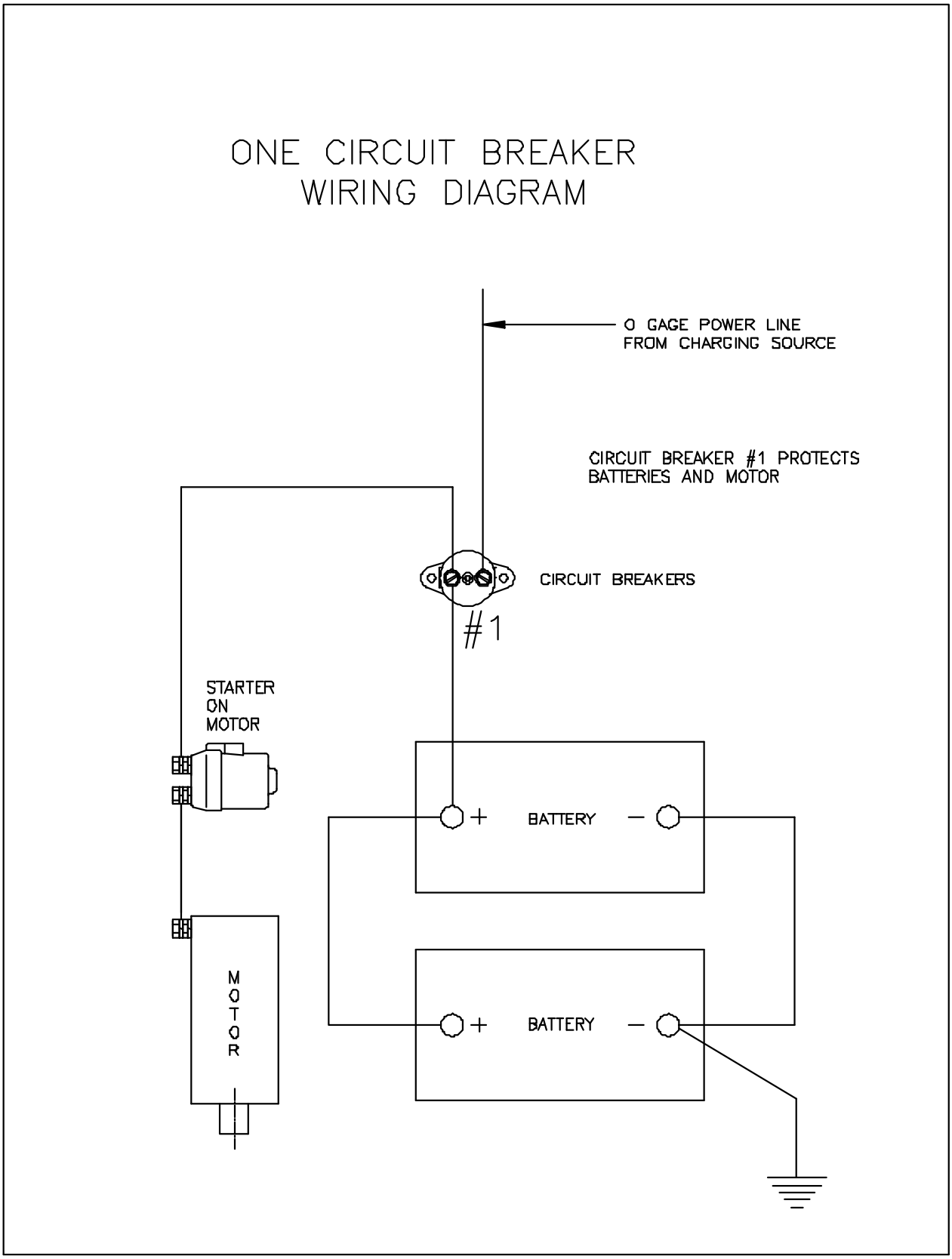

WIRING DIAGRAM

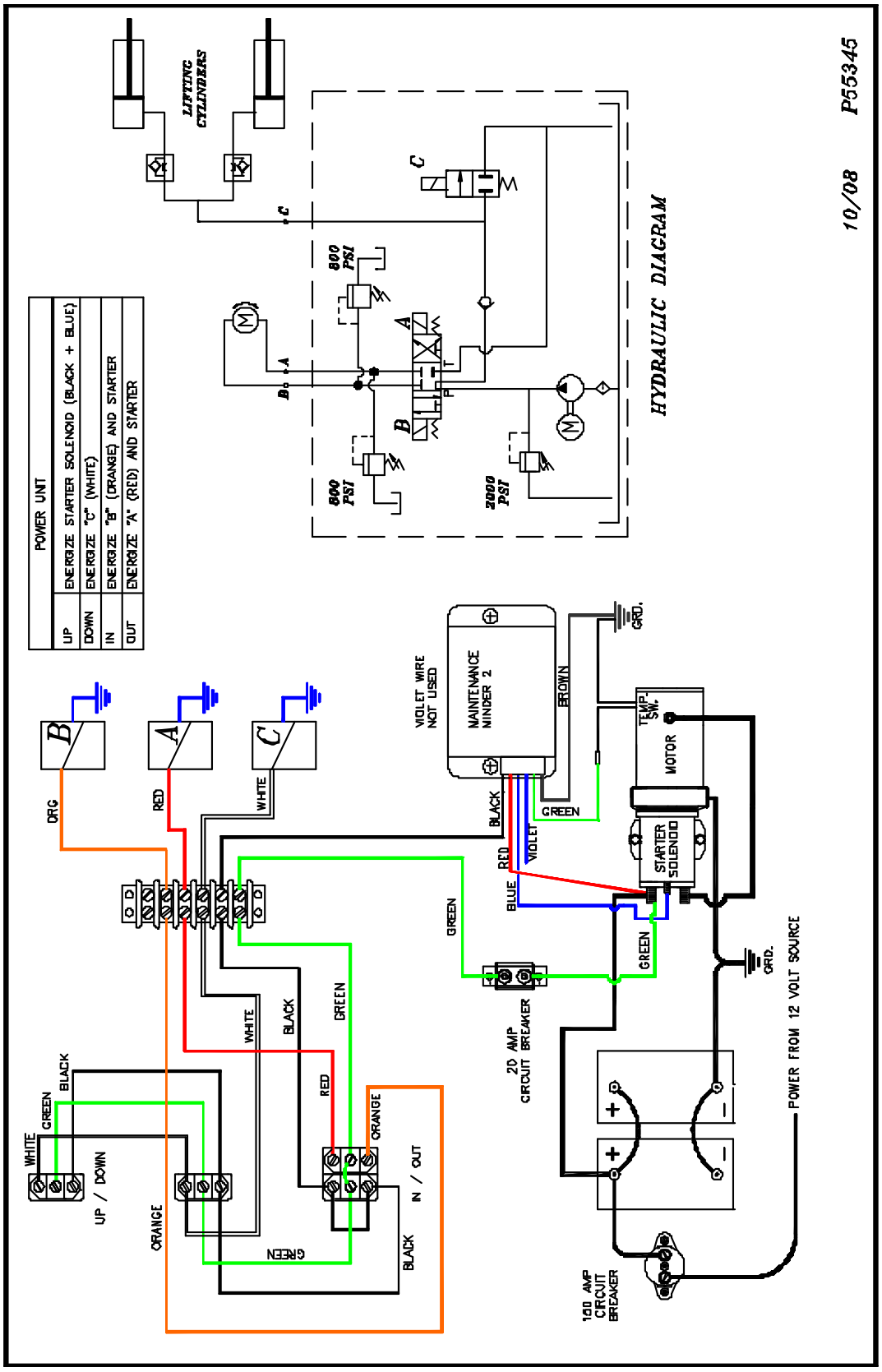

POWER UNIT REPLACEMENT PARTS

Monarch Power Unit And Maintenance Minder 2

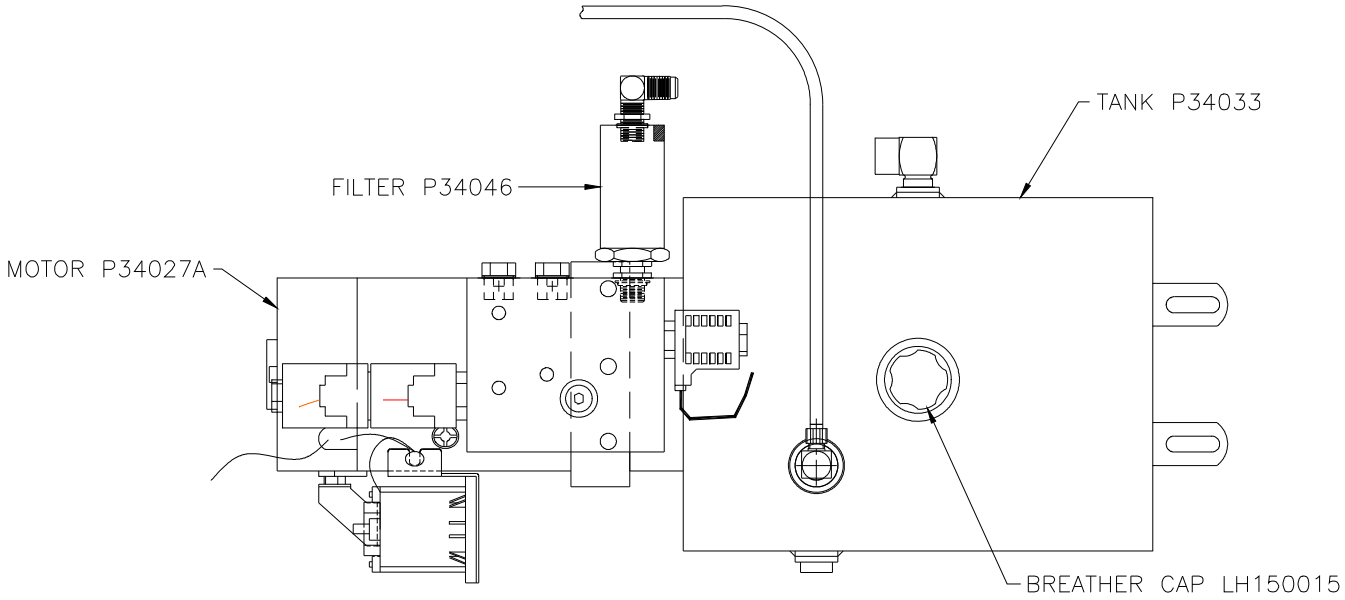

TOP VIEW

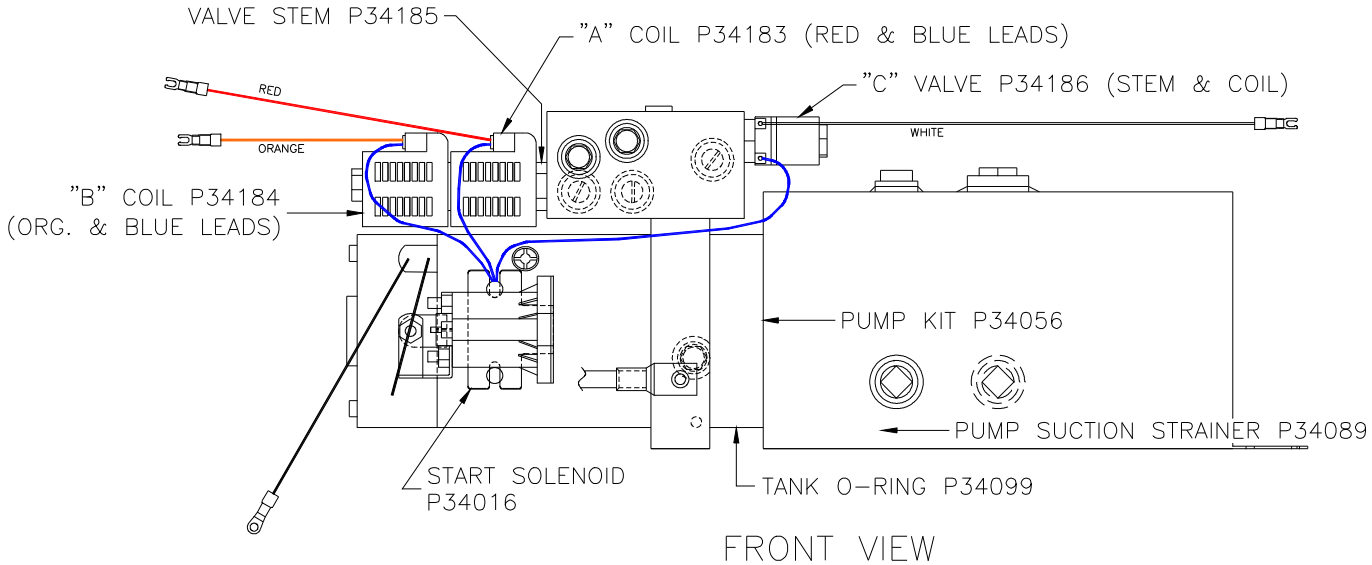

FRONT VIEW

COMPLETE POWER UNIT (LESS FILTER AND FITTINGS) P34171

MAINTENANCE MINDER 2® CONTROLLER P46608H

HYDRAULIC - INTERIOR REPLACEMENT PARTS

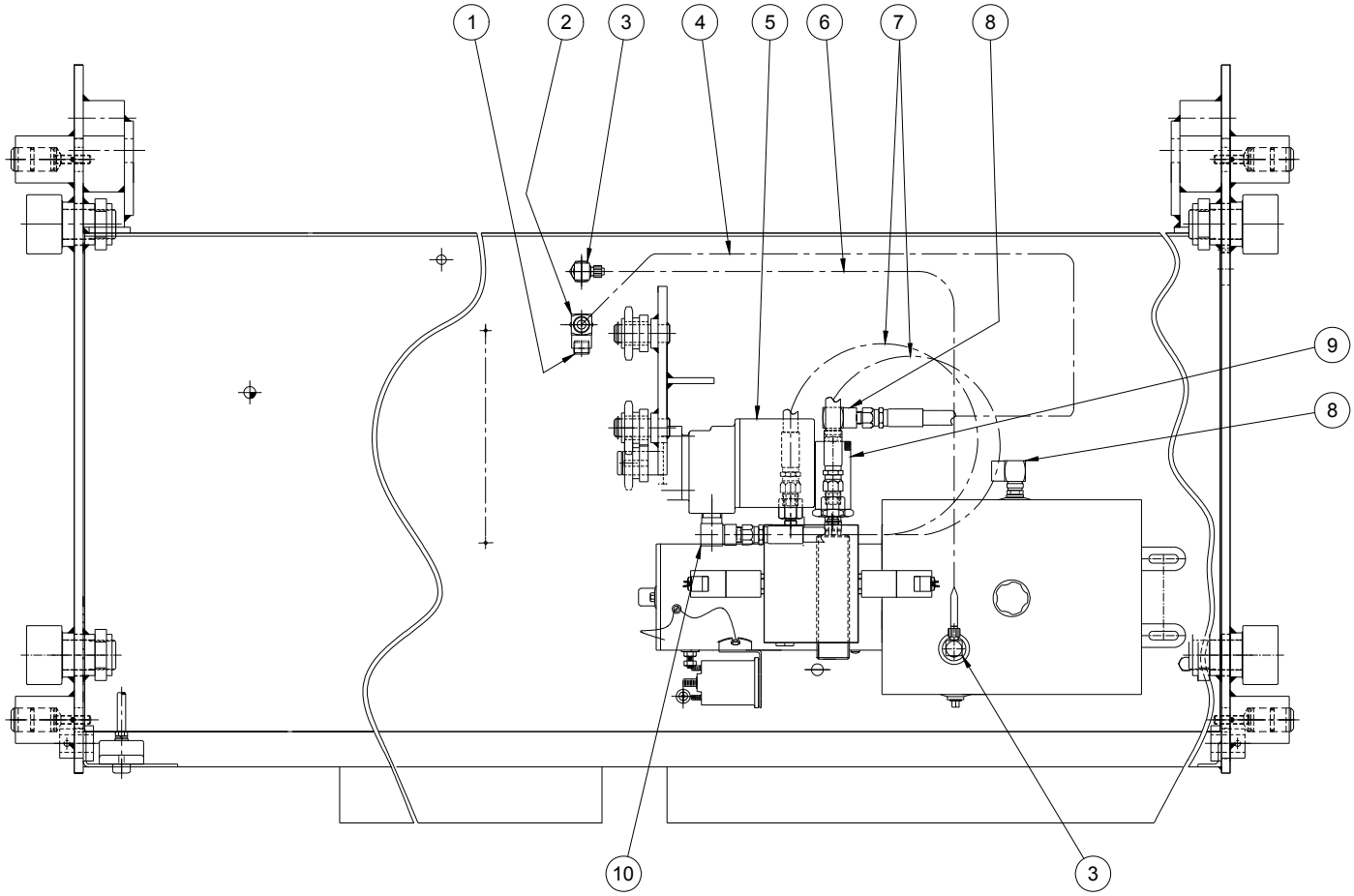

INDEX NUMBER	QTY	PART NUMBER	DESCRIPTION	COMMENTS
1	1	P34004	Cap Nut	JIC 9/16-18
2	1	P34048	Tee	JIC 9/16-18 M-M-F
3	2	P33932	Brass Male Elbow	3/8NPT TO 1/4" HOSE
4	1	AT-501-354-027	Hydraulic Hose	3/8 w/JIC ENDS
5	1	P33625	Hydraulic Motor	
6	1	P33702-026	1/4" Poly Tube	
7	2	AT-501-292-020	Hydraulic Hose	1/4 NPT – 3/8 NPT
8	2	P34020	Elbow	SAE O-RING - JIC
9	1	P34046	Inline Filter	
10	2	P33202	Street Elbow	1/2(M) TO 3/8(F)

HYDRAULIC BOTTOM-SIDE REPLACEMENT PARTS

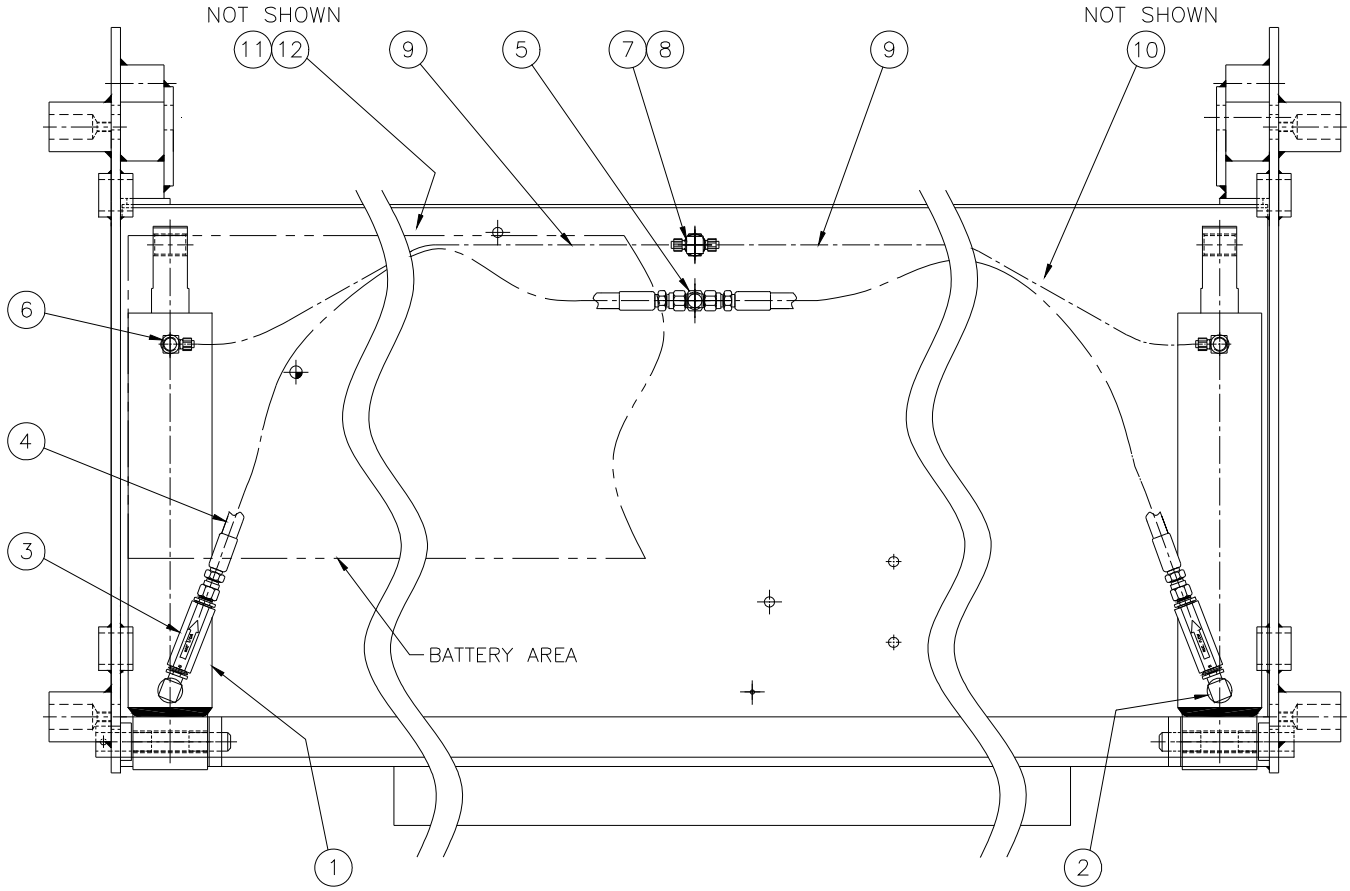

INDEX NUMBER	QTY	PART NUMBER	DESCRIPTION	COMMENTS
1	2	P34182	Hydraulic Cylinder	3" BORE x 12" STROKE
2	2	P34041	Male Elbow	SAE O-RING (M) – SAE O-RING (M)
3	2	P34161	Flow Control	2.0 GPM
4	2	AT-501-354-044	Hydraulic Hose	
5	1	P34105	Bulkhead Tee	
6	2	P33932	Brass Male Elbow	
7	1	P33699	Brass Tee	1/4 NPT TO 1/4 TUBE
8	1	P33617	Reducer	3/8 NPT – 1/4 NPT
9	2	P33702-041	1/4 " Poly Tube	
10	4	P46335	Wire Tie	
11	2	P46251	Loom Clamp	
12	2	P17518	Self-Tap Screw	

REPLACEMENT BEARINGS, SHAFTS, MISC.

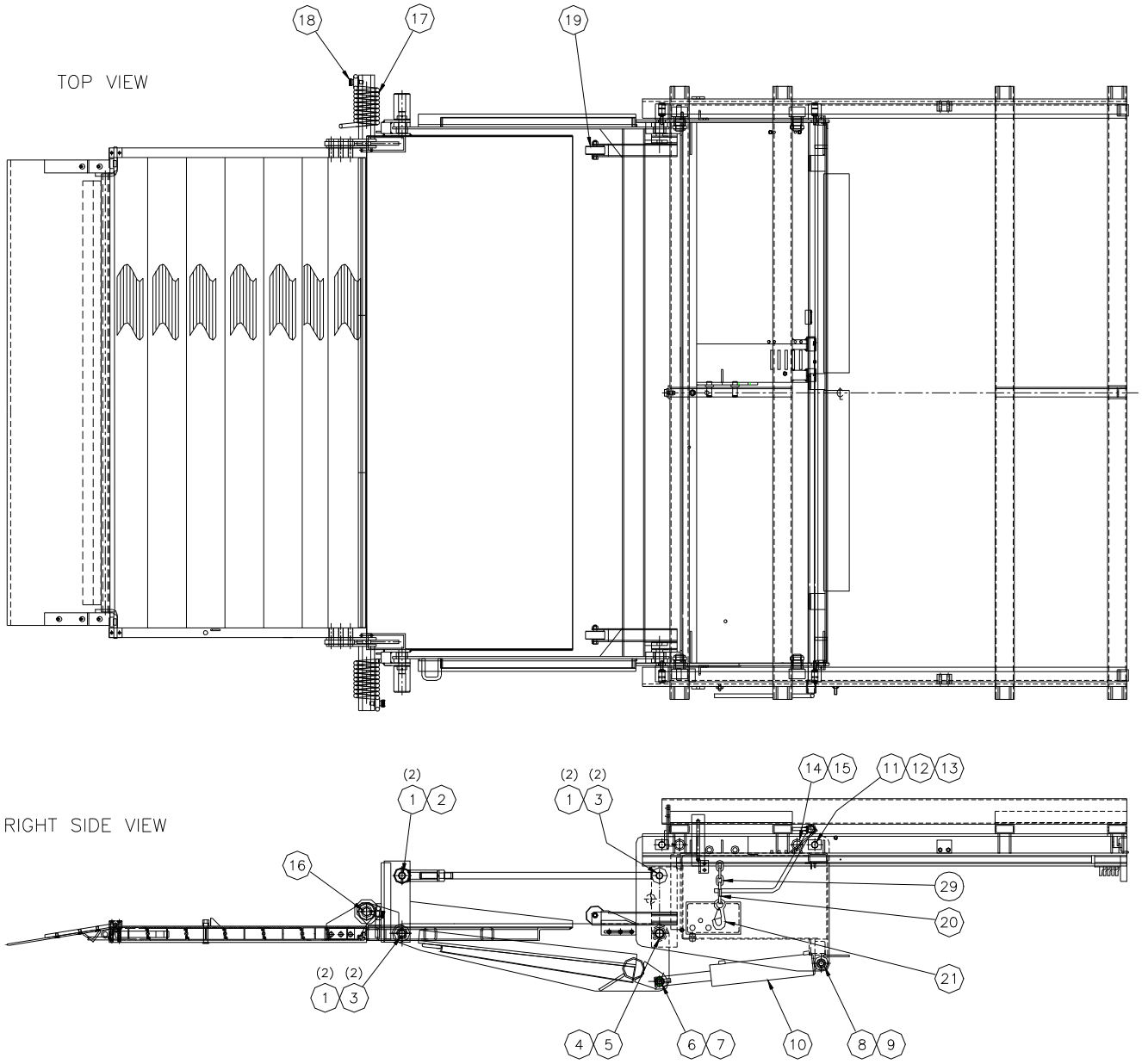

REPLACEMENT BEARINGS, SHAFTS, MISC. – cont

INDEX NUMBER	QTY	PART NUMBER	PART NAME	MATERIAL / SIZE
1	6	P43567	Bearing	1 ID x 1-1/2 LG.
2	2	AP-817-582	Pin	CHR RD / 1 DIA. x 7-5/8 LG.
3	4	AP-817-580	Pin	CHR RD / 1 DIA. x 3-1/4 LG.
4	2	P43566	Bearing	1-1/4 ID x 1-1/2 LG.
5	2	AP-817-579	Pin	CHR RD / 1 DIA. x 1-1/4 DIA x 3-1/4 LG.
6	2	P43574	Bearing (Cyl. rod end)	3/4 ID x 1-1/4 LG.
7	2	AT-817-088-001	Pin	CHR RD / 1 DIA. x 3/4 DIA x 3-3/8 LG.
8	4	P43573	Bearing (Cyl. base)	3/4 ID x 3/4 LG.
9	2	AT-817-088-002	Pin	CHR RD / 1 DIA. x 3/4 DIA x 5-7/16 LG.
10	2	P34182	Hydraulic Cylinder	3 Bore x 12 Stroke
11	4	AP-817-044	Side Skid Pad	1 OD x 1-13/16 LG.
12	4	P33925	O-Ring – Skid Pad	
13	4	AP-817-255	Disc – Skid Pad	15/16 OD
14	4	P37544	Cam Roller	One at each corner
15	4	P32012	Grease Fitting	At Cam Roller
16	2	AP-817-564	Pin	CHR RD / 1-1/4 DIA x 6 LG.
17	2	P25231	Torsion Spring	
18	2	P15548	Shoulder Screw	3/4 DIA x 1 w/ 5/8-11 Thrds.
19	2	P37553	Roller	At Radius Arm, 2” dia.
20	1	P33545	Rapid Connecting Link	
21	1	P33540	Safety Snap Hook	
22	8	P47514	Roll Pin 1/4 X 1-1/2	Not Shown – Use at Items 3, 7, 9
23	4	P47531	Roll Pin 1/4 X 1-3/4	Not Shown – Use at Items 5, 16
24	2	P47538	Roll Pin 1/4 X 2-1/2	Not Shown – Use at Items 2
25	2	P14519	Out Stop Set Screw	Not Shown – 3/8-16 X 6 LG.
26	4	P22506	Out Stop Jam Nut	Not Shown – 3/8-16
27	2	AP-817-592	Out Stop Angle	Not Shown
28	7	P32016	Grease Fitting	Not Shown – At Out Stop Shaft, Cyl., Sprockets
29	18"	P38546	5/16 Transp. Chain	16 Links

CHAIN AREA REPLACEMENT PARTS

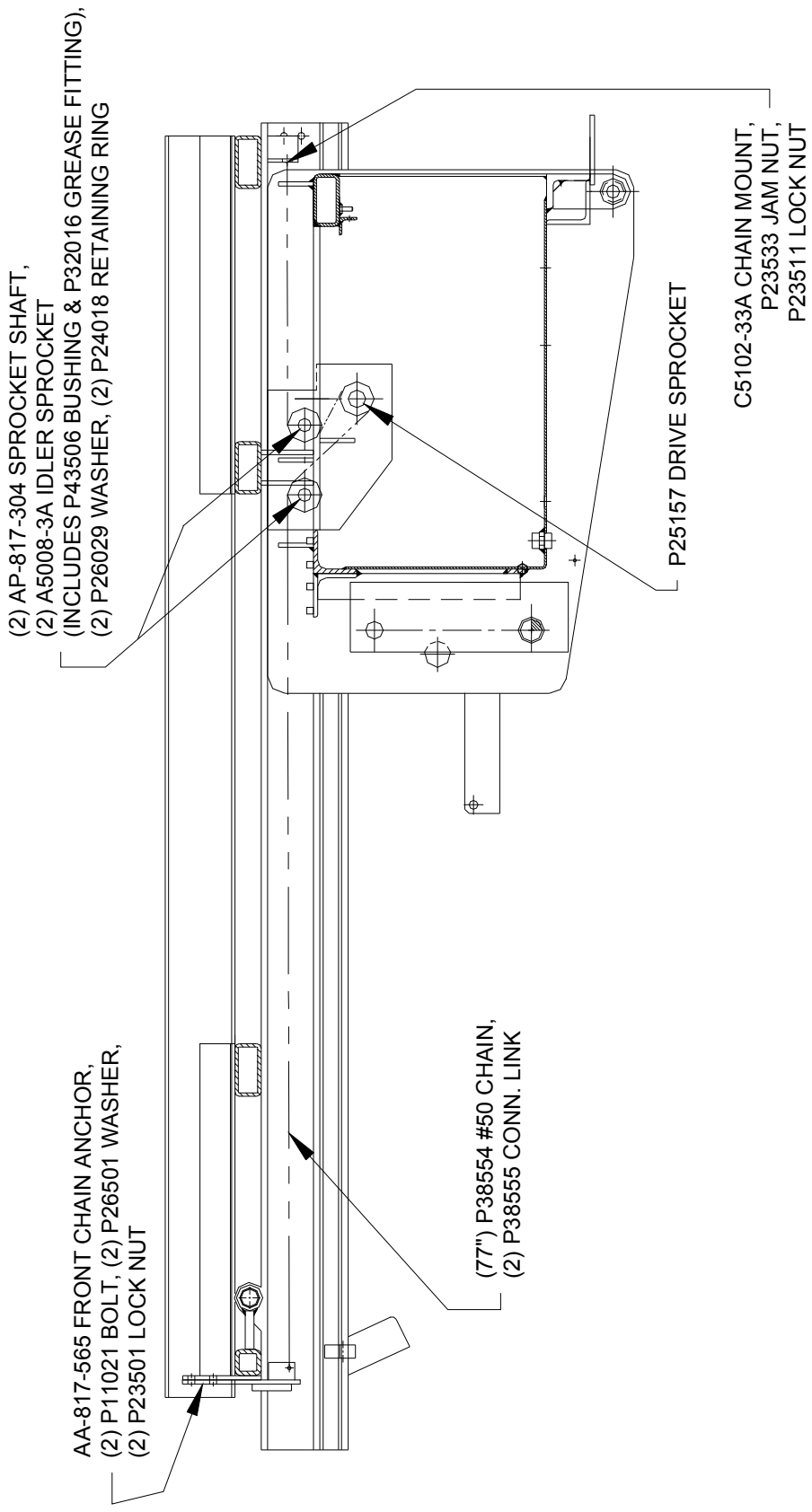

EMERGENCY HAND PUMP PARTS (OPTIONAL)

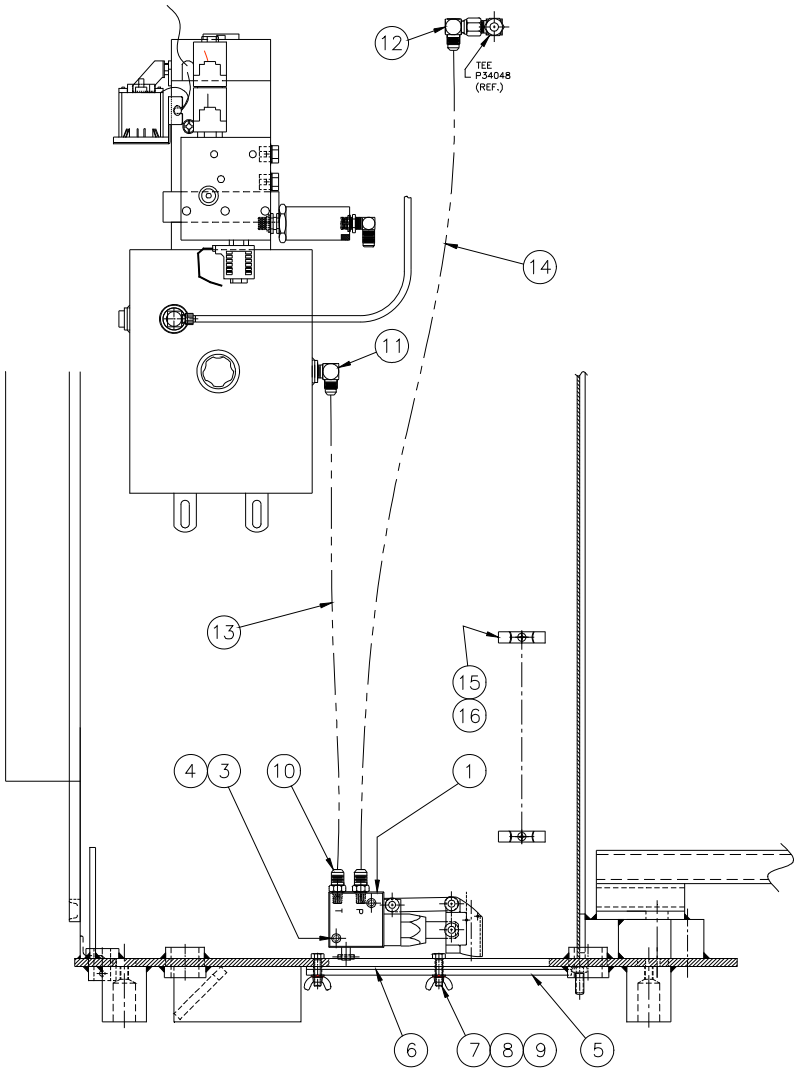

TOP VIEW

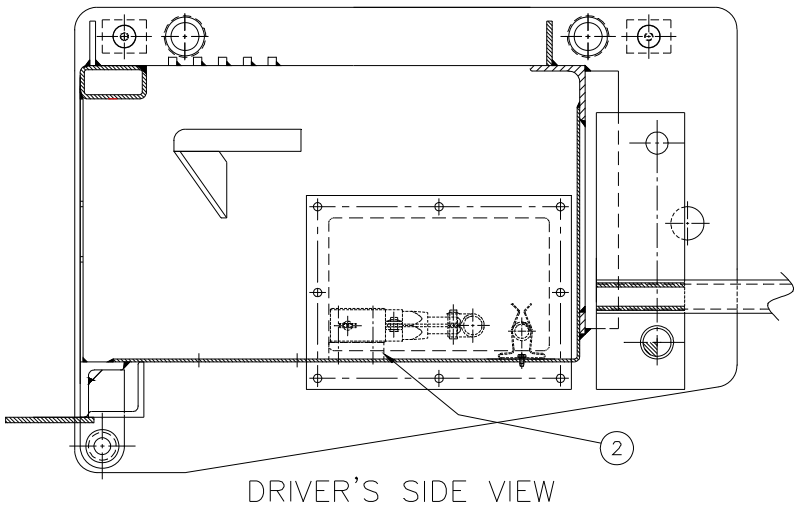

DRIVER'S SIDE VIEW

EMERGENCY HAND PUMP PARTS (OPTIONAL)

INDEX #	QTY	PART #	DESCRIPTION	COMMENTS
1	1	P33902	Hand Pump W/Handle	
2	1	AP-658-355	Spacer, Hand Pump	
3	2	P16504	Soc Hd Cap Screw	1/4-20 x 3/4 LG.
4	2	P23502	Lock Nut	1/4-20
5	1	BP-817-707	Cover Plate - LPR	
6	1	BP-817-708	Gasket Cover Plate - LPR	
7	8	P11059	Hex HD Cap Screw	18 - 8 SS 5/16 - 18 x 1 - 1/4 LG
8	8	P27027	Lock Washer	5/16
9	8	P23545	Wing nut	18 - 8 SS 5/16 - 18
10	2	P34006	Straight Adapter	1/4 - NPT (M) – JIC (M)
11	1	P34005	Elbow	3/8 - NPT (M) – JIC (M)
12	1	P34051	90° Elbow	JIC (F) – JIC (M)
13	1	AT-501-292-021	Hydraulic Hose Assembly	JIC (F) – JIC (F)
14	1	AT-501-354-037	Hydraulic Hose Assembly	JIC (F) – JIC (F)
15	2	P45192	Tool Holder	
16	2	P17518	Self-Tapping Screw	10-32 x 1/2 LG

RETENTION RAMP PARTS LPR4500RB

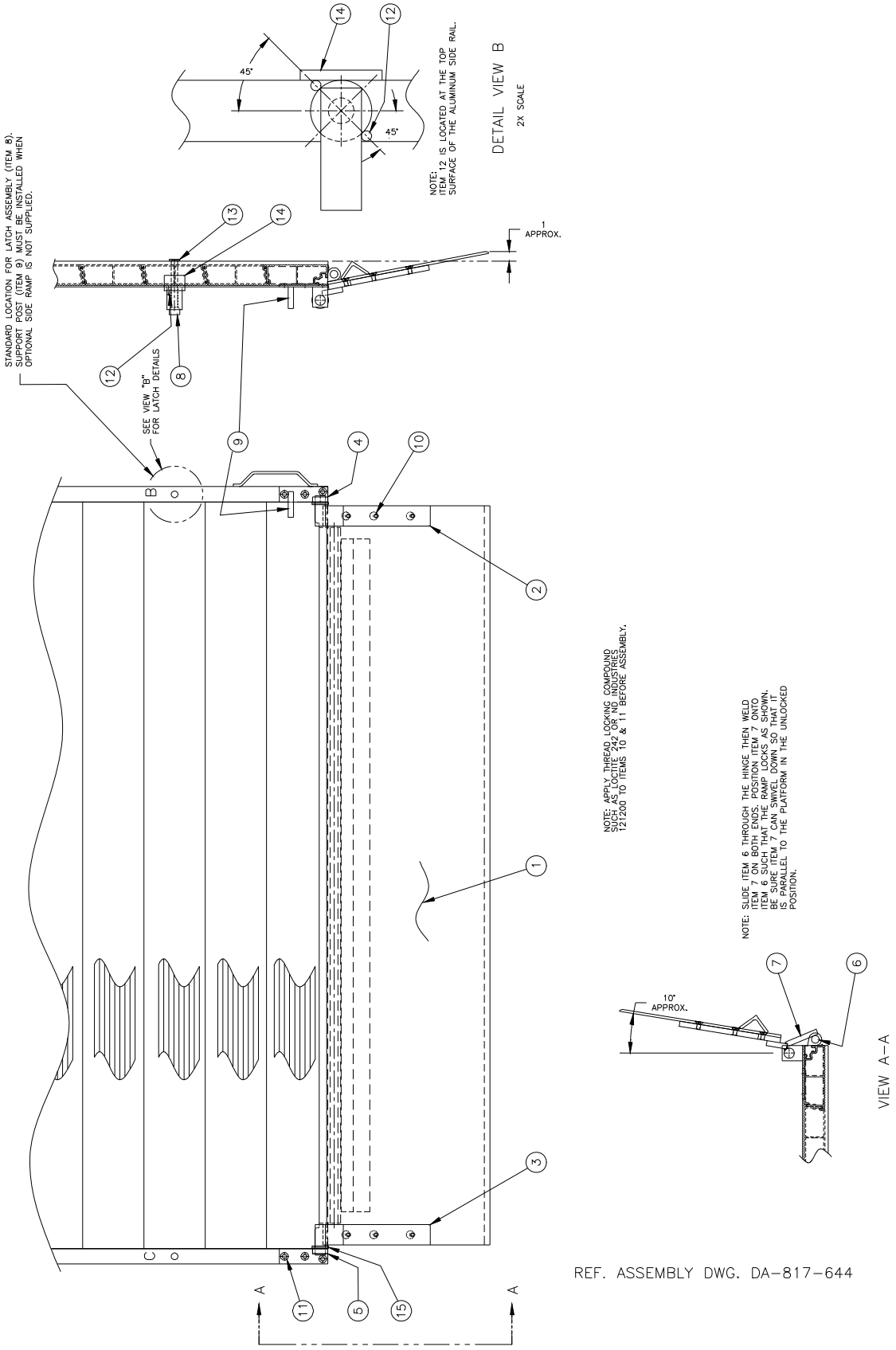

RETENTION RAMP PARTS LPR4500RB

INDEX #	QTY	PART #	DESCRIPTION	COMMENTS
1	1	CA-817-558	Retension Ramp Weldm.	
2	1	BA-817-645	Hinge Assembly – RH	
3	1	BA-817-646	Hinge Assembly – LH	
4	1	BA-817-648	Hinge Assembly – RH	
5	1	BA-817-647	Hinge Assembly – LH	
6	1	S752-072.500	CR RND	3/4 in Dia x 72 - 1/2
7	2	AP-817-649	Hold Up Tab	
8	1	BA-817-650	Latch Assembly	
9	1	S150-002.125	Support Post	HR Flat 1/2 x 2- 1/2 x 2 - 1/8 LG
10	6	P18525	Flat Head Cap Screw	3/8 - 16 x 7/8 LG
11	6	P18522	Flat Head Cap Screw	3/8 - 16 x 1 LG
12	2	S339-000.750	Round Stop	HR Rnd. 1/4 Dia x 3/4 LG
13	1	AP-451-947	Cap	
14	1	A023-002.000	Stop Plate	AL Rect Bar 1/4 x 1- 1/2 x 2 LG
15	4	P26020	Mach. Bushing	1-5/8 OD x 1-1/32 ID x .135 THK
16	2	P17518	Self-Tapping Screw	10-32 x 1/2 LG

RETENTION RAMP PARTS LPR45RBSR

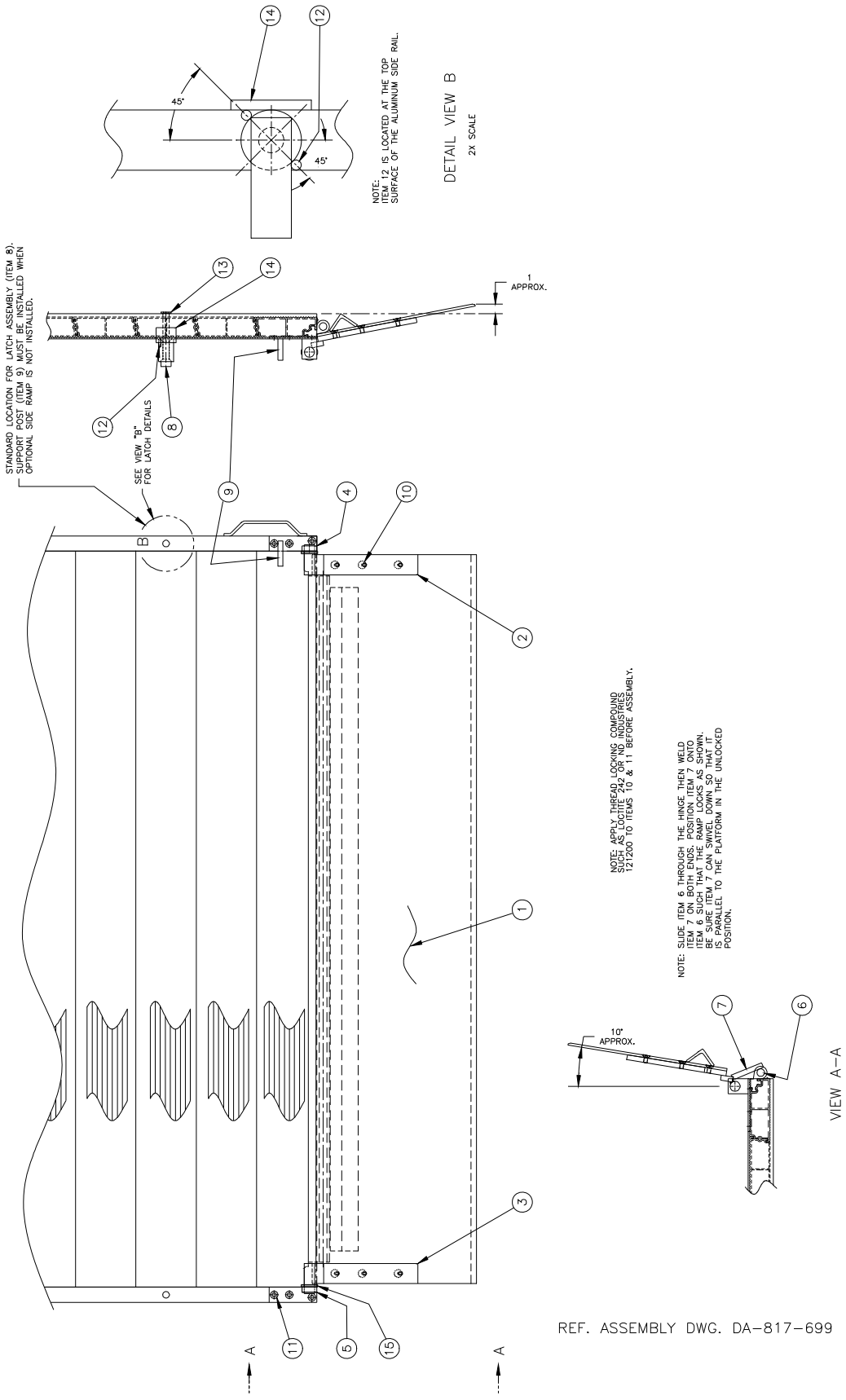

REF. ASSEMBLY DWG. DA–817–699

RETENTION RAMP PARTS LPR45RBSR

INDEX #	QTY	PART #	DESCRIPTION	COMMENTS
1	1	CA-817-558	Retension Ramp Weldm.	
2	1	BA-817-710	Hinge Assembly – RH	
3	1	BA-817-711	Hinge Assembly – LH	
4	1	BA-817-700	Hinge Block Assembly – RH	
5	1	BA-817-701	Hinge Block Assembly – LH	
6	1	S752-072.500	CR RND	3/4 in Dia x 72 - 1/2
7	2	AP-817-649	Hold Up Tab	
8	1	BA-817-650	Latch Assembly	
9	1	S150-002.125	Support Post	HR Flat 1/2 x 2- 1/2 x 2 - 1/8 LG
10	6	P18525	Flat Head Cap Screw	3/8 - 16 x 7/8 LG
11	6	P18522	Flat Head Cap Screw	3/8 - 16 x 1 LG
12	2	S339-000.750	Round Stop	HR Rnd. 1/4 Dia x 3/4 LG
13	1	AP-451-947	Cap	
14	1	A023-002.000	Stop Plate	AL Rect Bar 1/4 x 1- 1/2 x 2 LG
15	4	P26020	Mach. Bushing	1-5/8 OD x 1-1/32 ID x .135 THK

SIDE RAMP PARTS (OPTIONAL) 113LPRCURBSIDE1

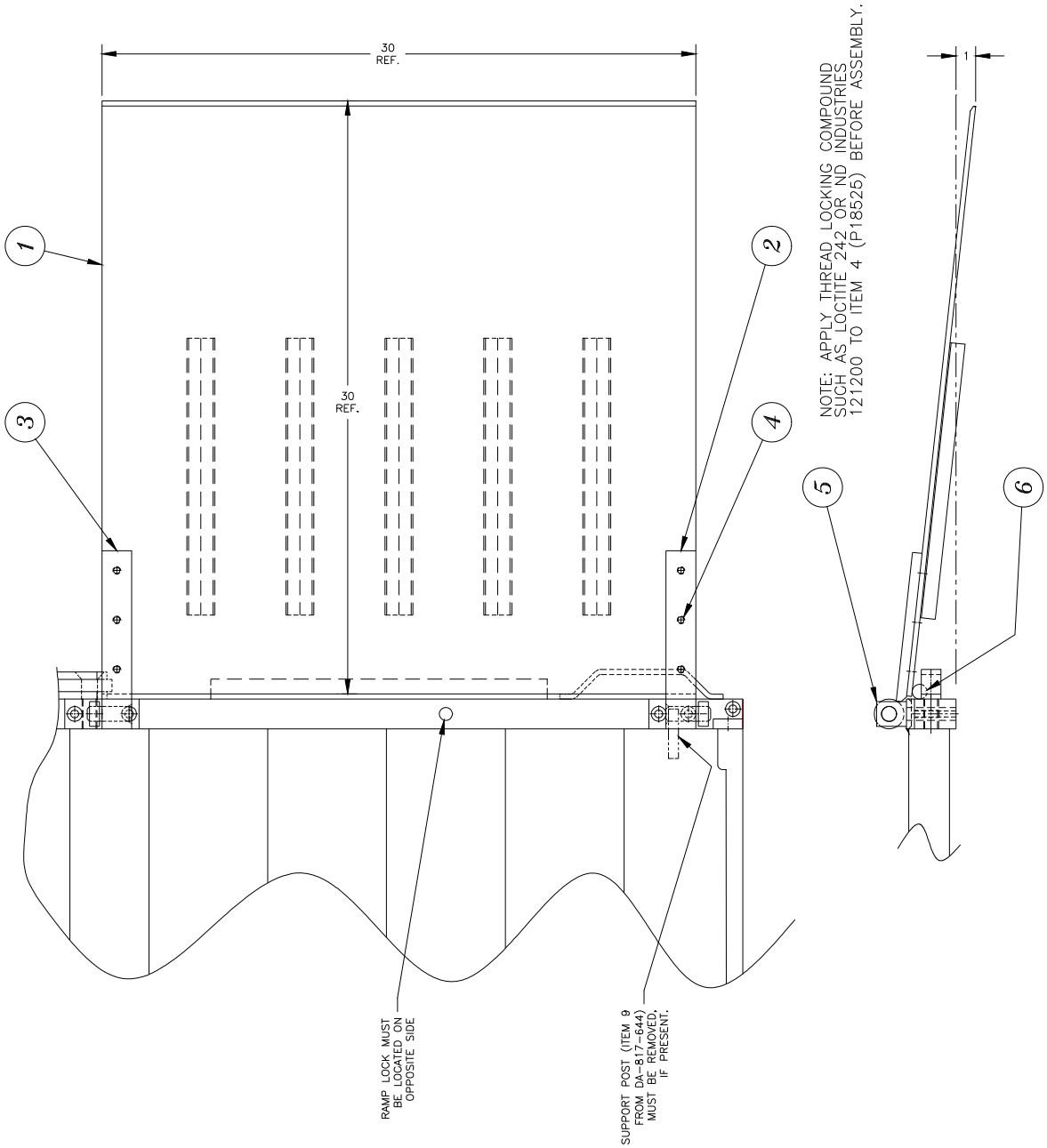

INDEX #	QTY	PART #	DESCRIPTION	COMMENTS
1	1	CA-817-690	Side Ramp Drilled	30 x 30
2	1	BA-817-660	Hinge Assembly – LH	
3	1	BA-817-661	Hinge Assembly – RH	
4	6	P18525	Flat Screw	SS 3/8 - 16 x 7/8 LG
5	2	AP-817-662	Hinge Block	
6	1	A133-017.000	Aluminum Round Bar	Al RD 3/4 IN Dia x LG

BASIC ELECTRICS – REPLACEMENT PARTS

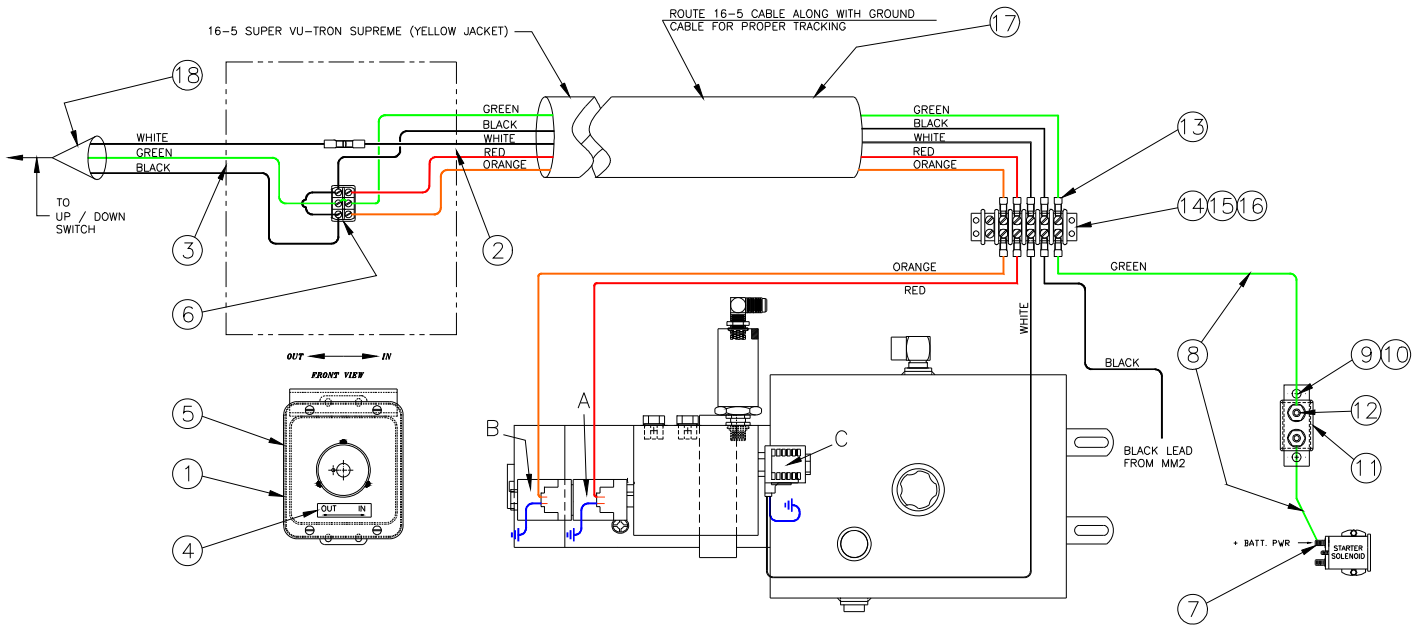

INDEX #	QTY	PART #	DESCRIPTION	COMMENTS
1	1	BA-551-585	Switch Box Assembly - Lpr	
2	1	P46445	Cord Grip	FOR 16-5 CABLE
3	1	P46517	Cord Grip	FOR 16-3 CABLE
4	1	AA-011-213	In/Out Decal	
5	1	P55317	“DO NOT OPEN” Decal	
6	1	AA-551-537	In/Out Potted Switch Assy	
7	1	P46235	Large Ring Terminal	
8	2	P46301	Wire - Green	12” LONG EA
9	2	P19501	Screw	10-24 X 1/2
10	2	P23504	Nut	
11	1	P46236	20 Amp Circuit Breaker	
12	2	P46507	Small Ring Terminal	
13	10	P46319	Fork Terminal	
14	1	P46449	Terminal Block	
15	2	P19510	Screw	
16	2	P23535	Lock Nut	
17	204"	P46748	16-5 CABLE (Flex)	Yellow Jacket
18	72"	P46186	16-3 CABLE	Black Jacket
	1	P55345	Electric / Hyd. Diagram (not shown)	w/ MM2 & temp. switch

STD. TOGGLE SWITCH WIRING

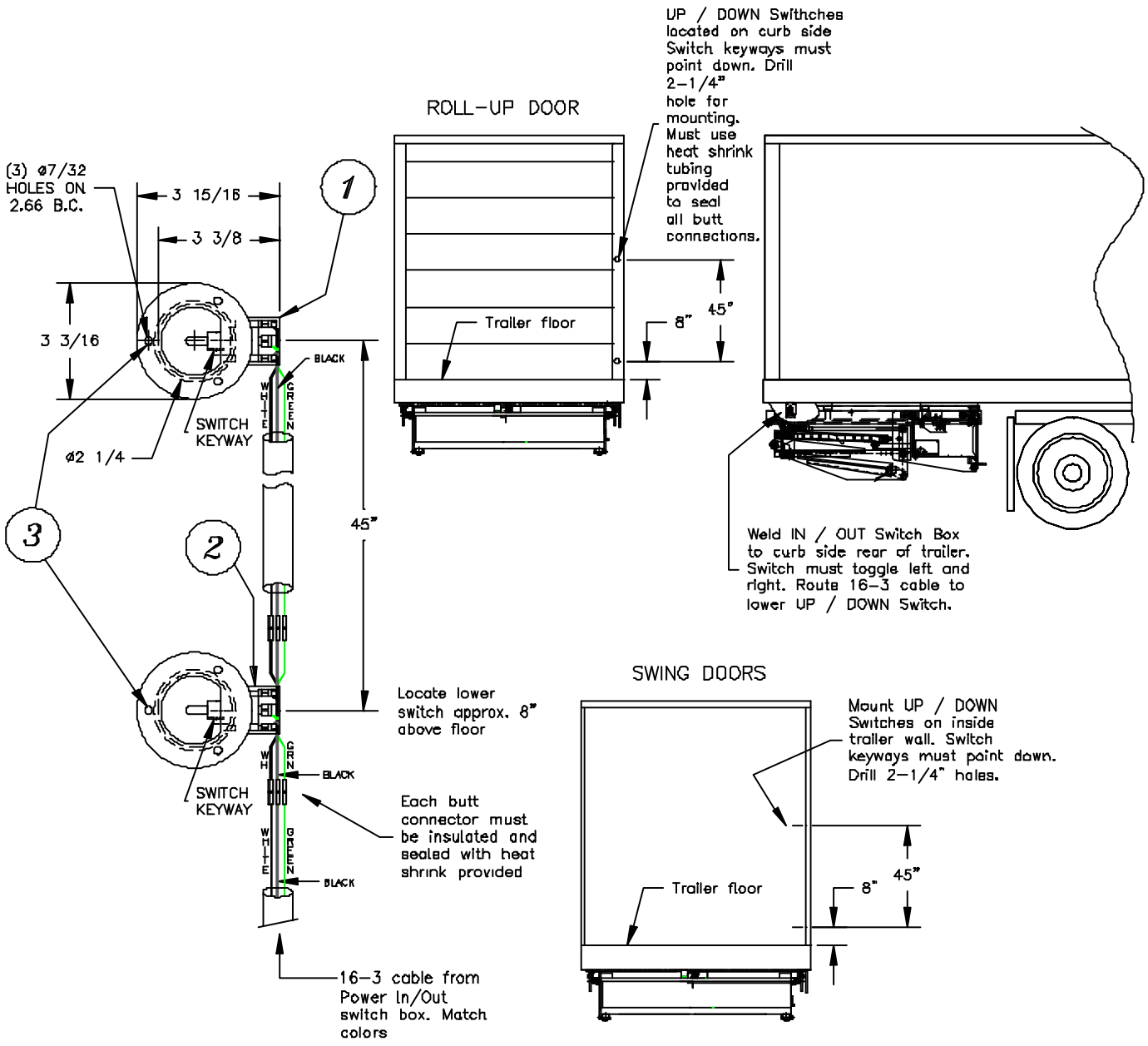

INDEX #	QTY	PART #	DESCRIPTION	MATERIAL SIZE / REMARKS
1	1	P46728	Upper Up/Down Switch Assembly	
2	1	P46729	Lower Up/Down Switch Assembly	Including Heat Shrink Tubing
3	6	P17536	Sheet Metal Screw	10-16 x 3/4 Type AB
4	4	P46250	Loom Clamp	Not Shown
5	4	P17518	Self Tapping Screw	Not Shown

TOGGLE SWITCH WIRING WITH PUSHBUTTON

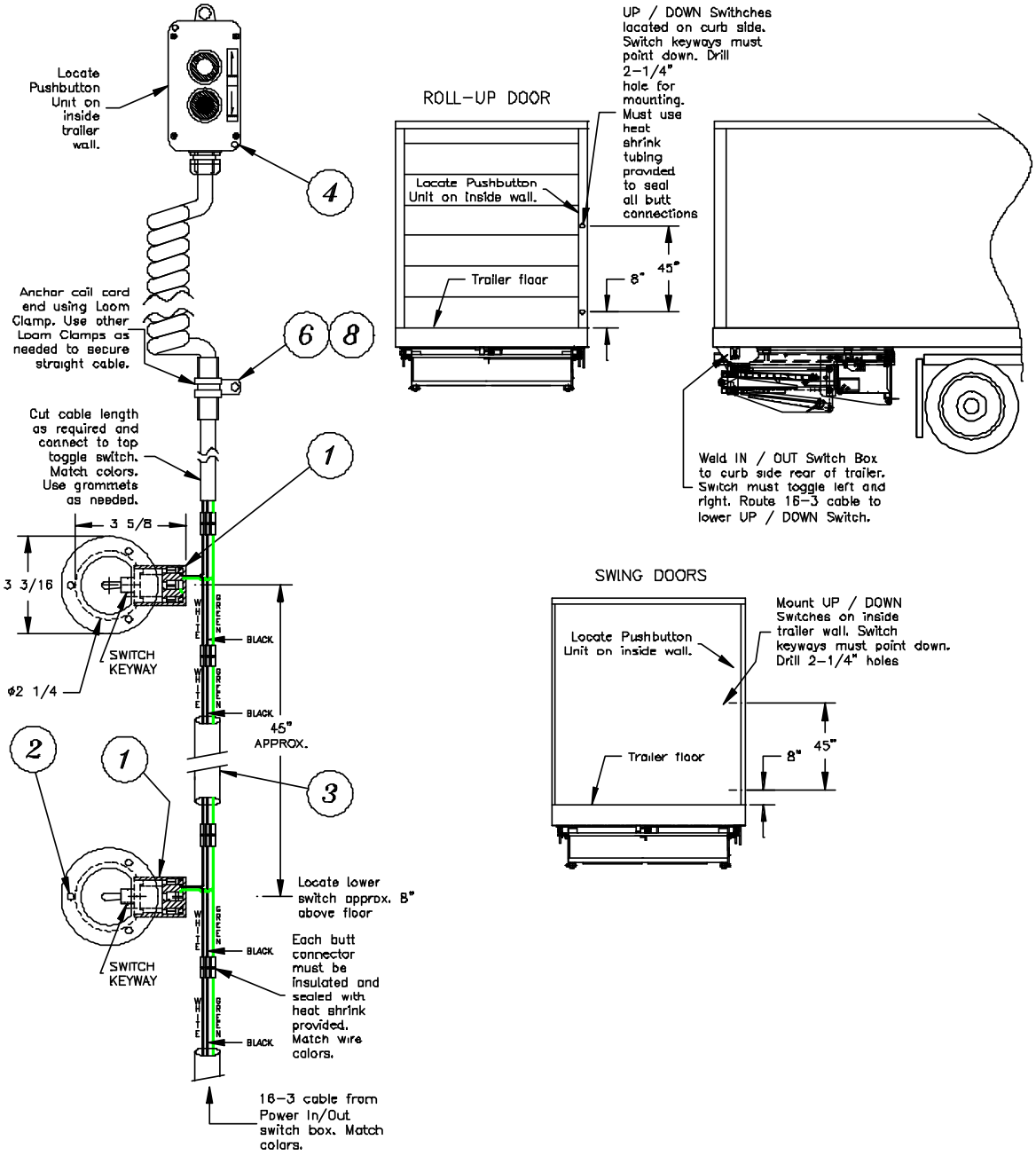

INDEX #	QTY	PART #	DESCRIPTION	MATERIAL SIZE / REMARKS
1	2	P46729	Lower Up/Down Switch Assembly	
2	6	P17536	Sheet Metal Screw	10-16 x 3/4 Type AB
3	1	P46186	16-3 Cable	1 Piece - 42" LG
4	1	BA-551-612	WAPB Assembly	
5	4	P25181	Grommet	
6	7	P46450	Loom Clamp	
7	1	P49108	HDDK for WAPB	
8	7	P175187	Self-Tap Screw	10-32 x 1/2 LG

EMERGENCY HAND PUMP – OPTION #184LPR

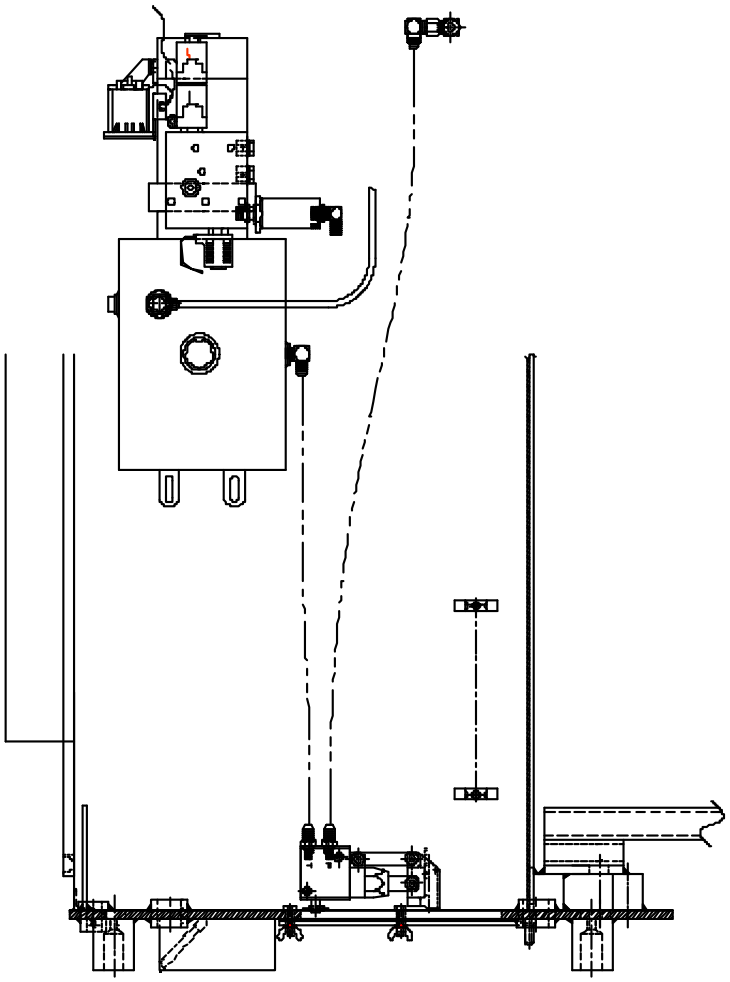

TOP VIEW

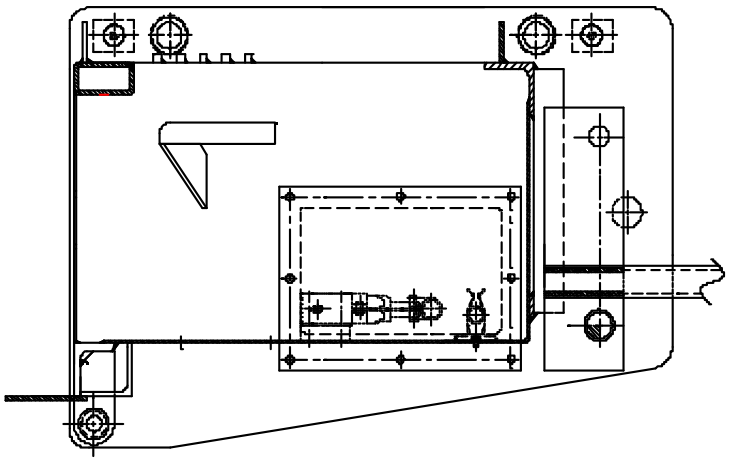

DRIVER'S SIDE VIEW

LEYMAN

LIFT GATES

TROUBLESHOOTING

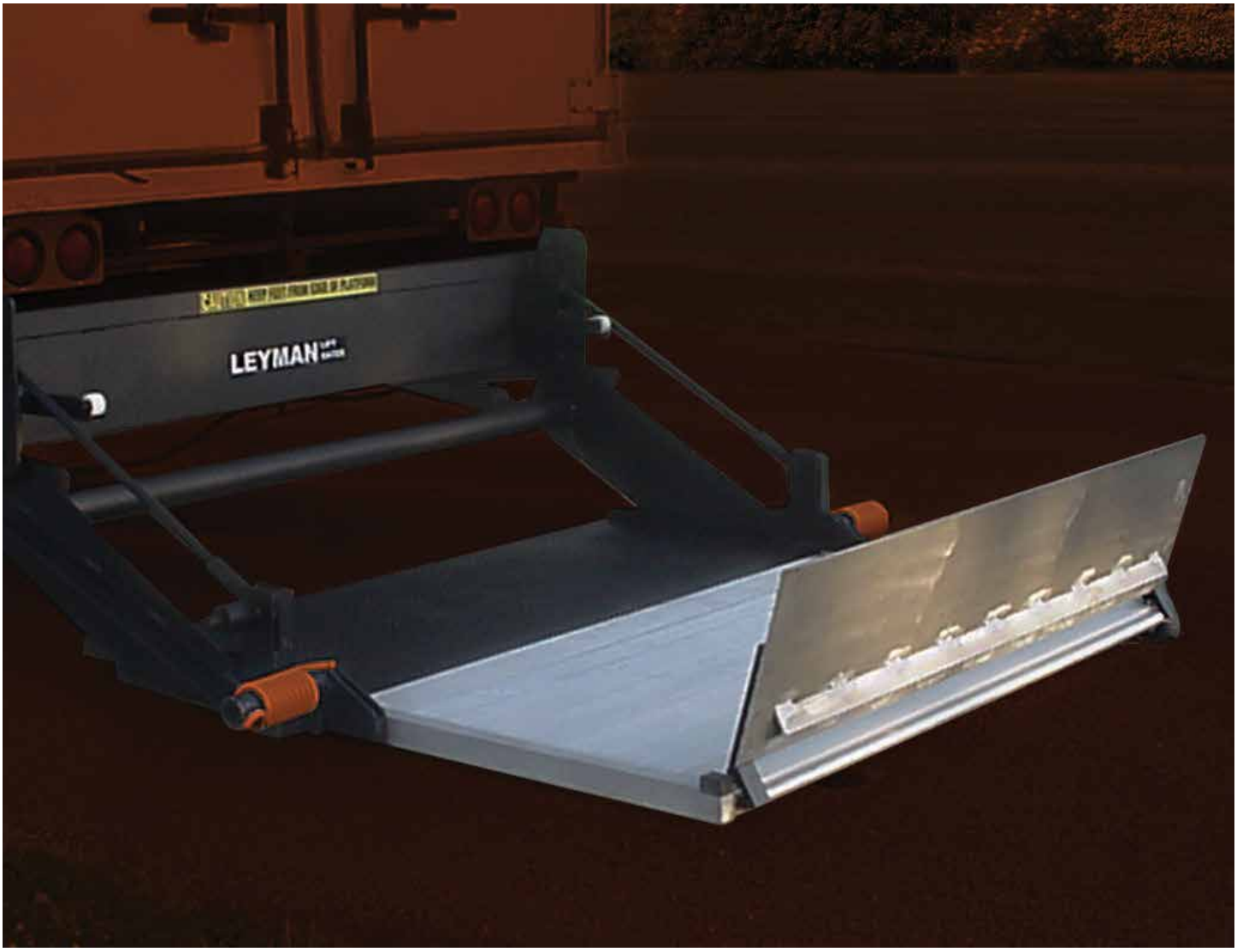

SYMPTOM / REMEDIES

Electronics and Hydraulic Schematics / Maintenance Minder ..... Page 5.2
Grounding ..... Page 5.3

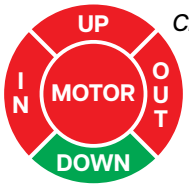

Click Icon For Remedies

1. Gate will **NOT** run **UP/IN/OUT** but goes **DOWN – MOTOR NOT RUNNING** .... Page 5.4

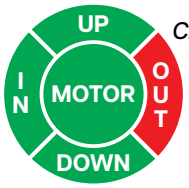

Click Icon For Remedies

2. Gate will run **UP/DOWN/IN** but will **NOT** run **OUT** ..... Page 5.5

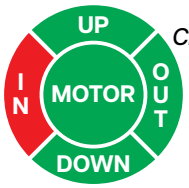

Click Icon For Remedies

3. Gate will run **UP/DOWN/OUT** but will **NOT** run **IN** ..... Page 5.6

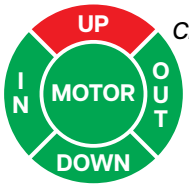

Click Icon For Remedies

4. Gate will run **IN/OUT/DOWN** but will **NOT** run **UP** ..... Page 5.7

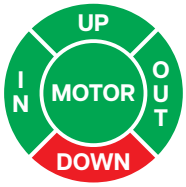

5. Gate will run **UP/IN/OUT** but will **NOT** run **DOWN** ..... Page 5.8

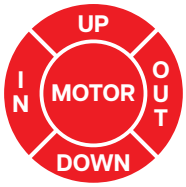

6. Gate will **NOT** run **UP/DOWN/IN/OUT – MOTOR NOT RUNNING** ..... Page 5.9

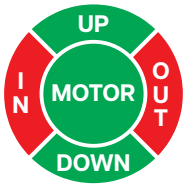

6. Gate will **NOT** run **IN/OUT – MOTOR RUNS SOUNDS UNDER PRESSURE** ..... Page 5.10

ELECTRIC AND HYDRAULIC SCHEMATICS/MM2®

Laminated on the inside of the power unit door is a wire and hydraulic schematic. Also, there is a box on the schematic that lets you what color wire each valve and motor is and which are activated so you know where to look if the gate is having a particular problem.

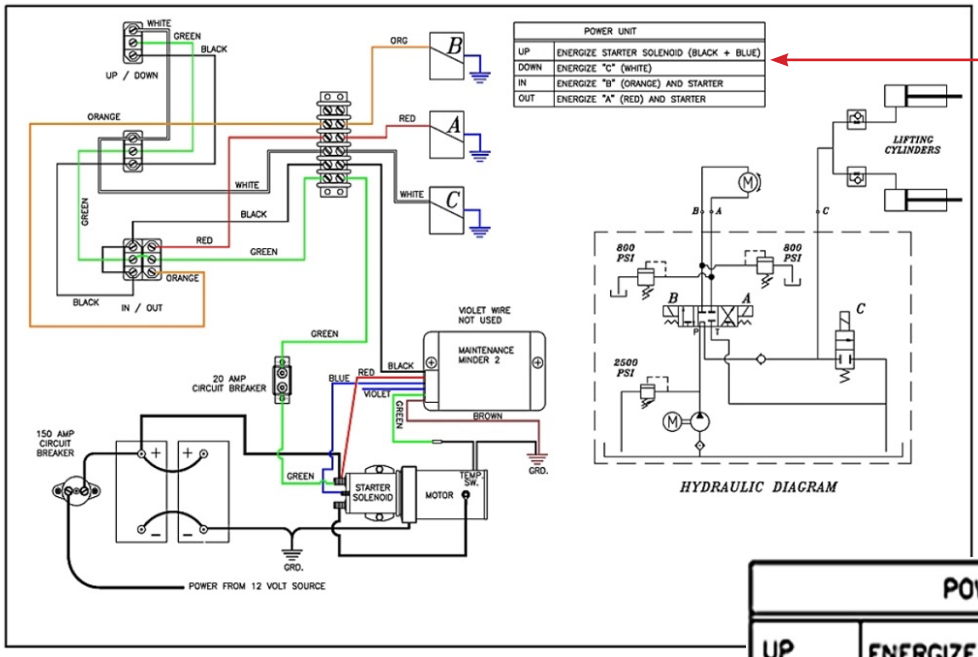

POWER UNIT	
UP	ENERGIZE STARTER SOLENOID (BLACK + BLUE)
DOWN	ENERGIZE "C" (WHITE)
IN	ENERGIZE "B" (ORANGE) AND STARTER
OUT	ENERGIZE "A" (RED) AND STARTER

Use this box whenever you are troubleshooting most problems as it tells you what valves and if the motor is running depending on what operation you are preforming.



Maintenance Minder2 Left Hand Light Codes

1. Doorbelling: This is cause by flipping a switch that runs the motor more than once rapidly which causes the motor to shut down and not run. Wait 2 to 3 seconds then run the gate again.

2 OK: This flashing green whenever you operate the switches to let you know everything is working properly.

3. Fault: The light becomes red to let you know a fault has happen. The screen also comes on to let you know what fault it was but only stays on for 30 seconds.

4. Service Faults: This comes on after 3000 Lifts to let you know that a PM is do. It will also beep every lift past 3000 but does not stop the operation of the gate.

GROUND WIRES

NOTE: Whenever troubleshooting a gate first make sure the batteries are fully charged, all connections are clean, tight, and all ground are secure

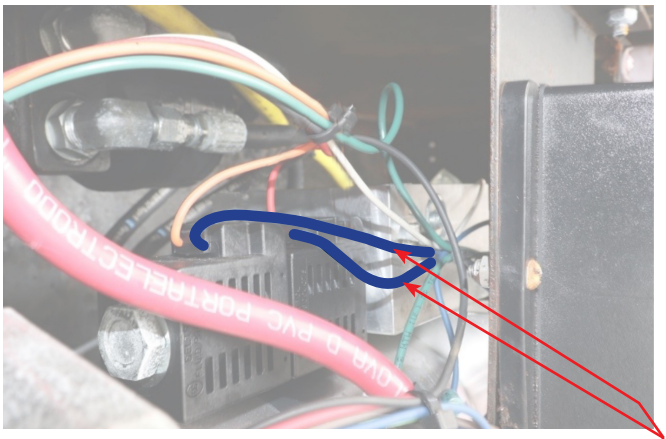

"A and B" Valve Ground Wires (Blue Wires)

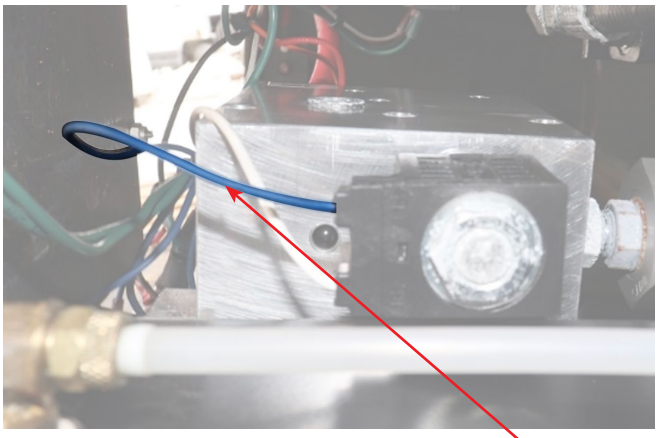

"C" Valve Ground Wire (Blue Wire)

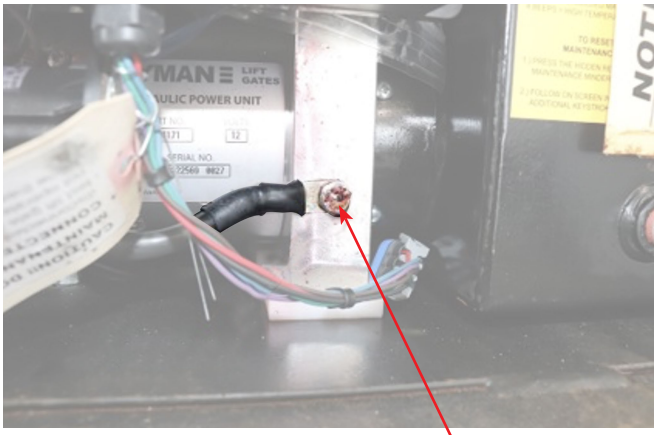

Ground to Side of Power Unit

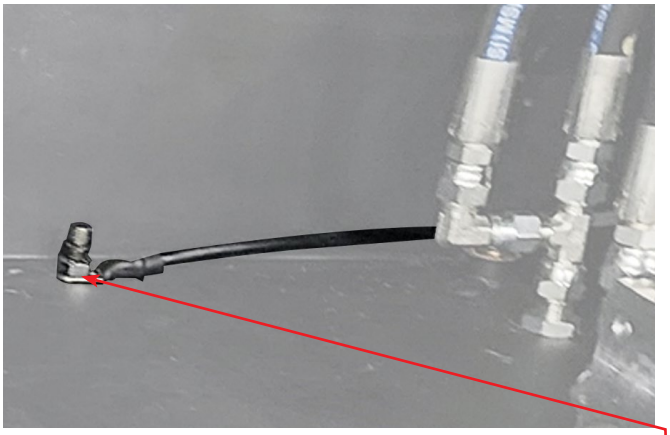

Ground from side of Power Unit to stud in box

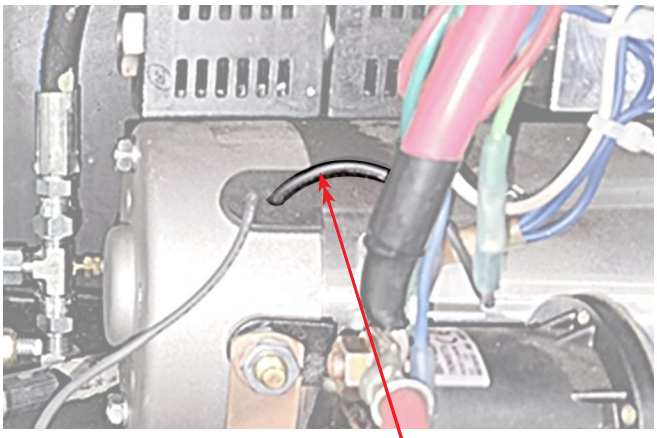

Motor Thermister Ground

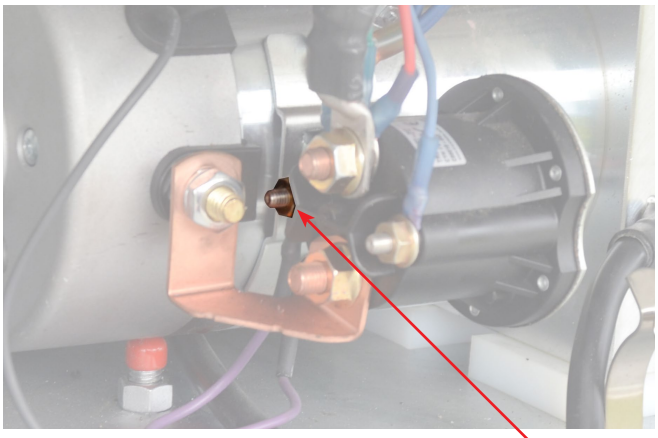

Small post starter solenoid ground

Condition / Recommended Action

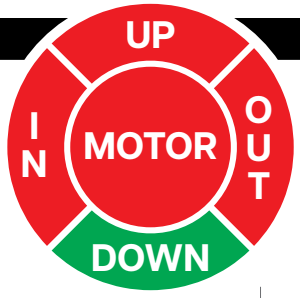

1:1

Check voltage at the test point inside the power unit on the **BLACK** wire for 12V by trying to run the gate up, in or out. If you have voltage of 12 volts or higher at the **BLACK** wire at the test point, then switches and **YELLOW** wire harness from gate to the in & out box are good.

Test Point in Power Unit Box

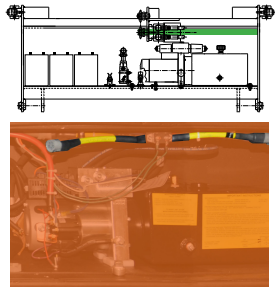

A - White Wire
B - Orange Wire
C - Red Wire
D - Black Wire
E - Green Wire

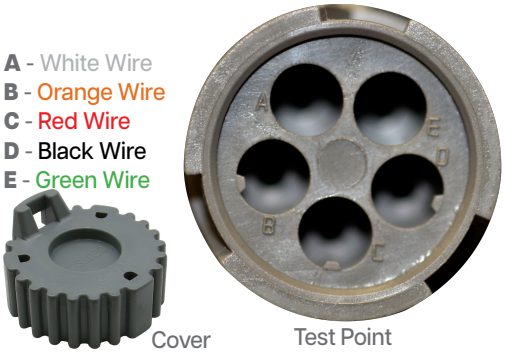

Cover

Test Point

1:2

Check to see if you have voltage on the small **BLUE**/**BLACK** wire on the starter solenoid when trying to run the gate up, in, or out. If you don't have voltage on the small **BLUE**/**BLACK** wire then more than likely the MM2 is bad or the pin on the MM2 plug is not making connection.

Power Unit Box - Solenoid

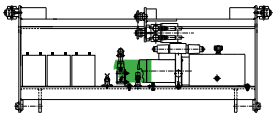



Starter Solenoid



1:3

If there is no voltage at the **BLACK** wire on the test plug, check continuity from the **BLACK** wire on each side of the **YELLOW** wiring harness. Unplug the **YELLOW** wire from the outside of the gate and the outside of the in & out switch box. If you have no continuity on the **BLACK** wire change the **YELLOW** cable wiring harness.

Yellow Switch Wire and Ground

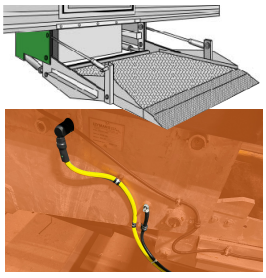

Duetsch Connection Wire Layout

White Wire
Orange Wire
Red Wire



No Connection
Black Wire
Green Wire

1:4

Check the condition of the starter solenoid. Use a jumper wire from the positive side of the battery to the small **BLUE**/**BLACK** wire on the small hot post on the starter solenoid. If the starter solenoid works and the motor runs then it could be the MM2 is not working correctly. If the starter solenoid doesn't run then the starter solenoid is bad.

Power Unit Box - Solenoid

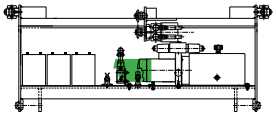



Starter Solenoid

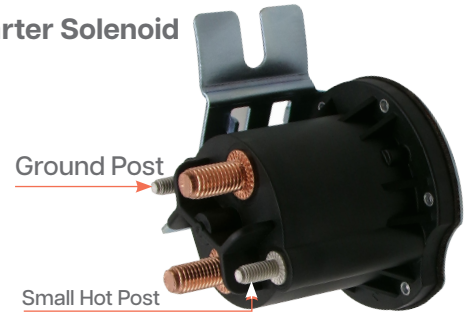

Condition / Recommended Action

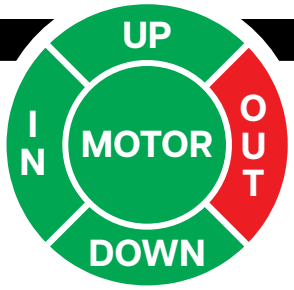

2:1

Check voltage at the test point inside the power unit on the **RED** wire for 12V by trying to run the gate out. If you have voltage at the **RED** wire at the test point, then switches and **YELLOW** wiring harness from gate to the in & out box are good.

Test Point in Power Unit Box

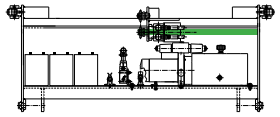

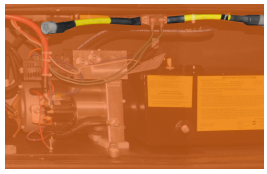

A - White Wire
B - Orange Wire
C - Red Wire
D - Black Wire
E - Green Wire



Cover



Test Point

2:2

If you have 12V, check coil on double stem. Easy way to check the coil is to swap coil "A" & "B". Push up on the In & Out switch if the gate runs out then the coil is bad. If the gate doesn't move and you hit up on the In & Out switch and the gate does not run out then the stem is bad.

Coils for In/Out in Power Unit Box

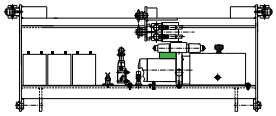

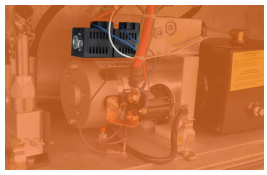



2:3

If there is no voltage at the **BLACK** wire on the test plug, check continuity from the **BLACK** wire on each side of the **YELLOW** wiring harness. Unplug the **YELLOW** wire from the outside of the gate and the outside of the in & out switch box. If you have no continuity on the **BLACK** wire change the **YELLOW** cable wiring harness.

Yellow Switch Wire and Ground

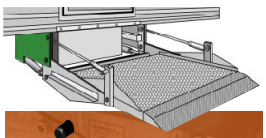

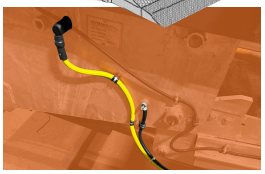

Deutsch Connection Wire Layout

White Wire
Orange Wire
Red Wire



No Connection
Black Wire
Green Wire

Condition / Recommended Action

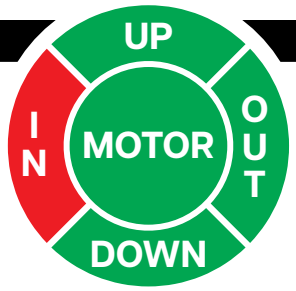

3:1

Check voltage at the test point inside the power unit on the **RED** wire for 12V by trying to run the gate out. If you have voltage at the **RED** wire at the test point, then switches and **YELLOW** wiring harness from gate to the in & out box are good.

Test Point in Power Unit Box

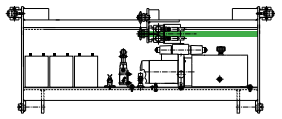

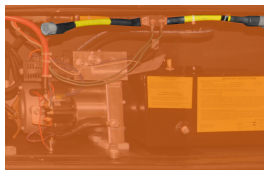

A - White Wire
B - Orange Wire
C - Red Wire
D - Black Wire
E - Green Wire



Cover



Test Point

3:2

If there is no voltage at the **BLACK** wire on the test plug, check continuity from the **BLACK** wire on each side of the **YELLOW** wiring harness. Unplug the **YELLOW** wire from the outside of the gate and the outside of the in & out switch box. If you have no continuity on the **BLACK** wire change the **YELLOW** cable wiring harness.

Yellow Switch Wire and Ground



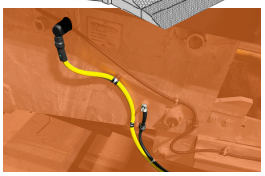

Deutsch Connection Wire Layout

White Wire
Orange Wire
Red Wire



No Connection
Black Wire
Green Wire

3:3

If you have 12V, check coil on double stem. Easy way to check the coil is to swap coil "A" & "B". Push up on the In & Out switch if the gate runs out then the coil is bad. If the gate doesn't move and you hit up on the In & Out switch and the gate does not run out then the stem is bad.

Coils for In/Out in Power Unit Box

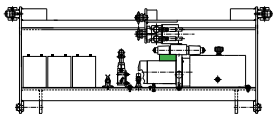

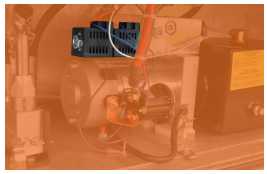



Condition / Recommended Action

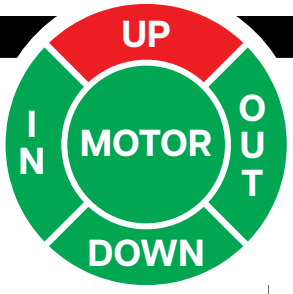

4:1

Check voltage at the **BLACK** wire at the test point inside the power unit when pushing up on the Up & Down switch. If you don't have 12V check continuity at the switches.

Test Point in Power Unit Box

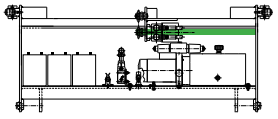

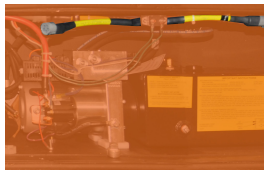

A - White Wire
B - Orange Wire
C - Red Wire
D - Black Wire
E - Green Wire



Cover

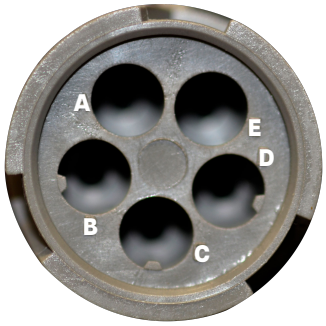

Test Point

4:2

To check continuity at the switches at the back of the In & Out box disconnect the plug at back of the box for the **YELLOW** wire. Check continuity at the up & down switch in the in & out box between the **GREEN** and **BLACK** wire when pushing up on the up & down switch in the box. If you do not get continuity then the switch inside the in & outbox is bad. But if all three up and down switches two in the sidewall of the trailer and the one in the up and down box don't work then the black wire inside the in & out box is bad.

Test Point for Switches

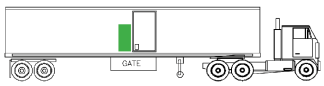

A - Green Wire
B - White Wire
C - Black Wire

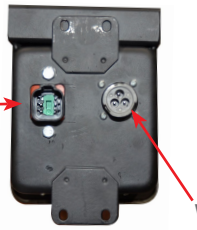

Yellow Wire Plug

Wire to switches inside trailer wall

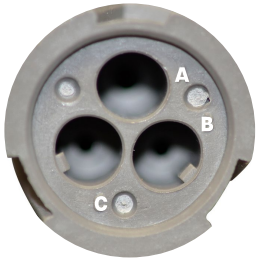

4:3

To check continuity at the switches in the side wall of the trailer at the back of the In & Out Box disconnect the plug at back of the box that goes up into the side wall of the trailer. Check continuity at the up & down switch in the in & out box between the **GREEN** and **BLACK** wire when pushing up on the up & down switch. If you get continuity then the wire and the bottom switch are good.

Test Point for Switches

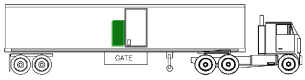

A - Green Wire
B - White Wire
C - Black Wire

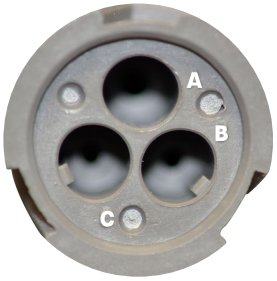

4:4

Do the same test for the upper switch. If you get continuity then wiring and switch is good. If neither switch works then the wire from the in & out box to the switches is bad.

Test Point for Switches

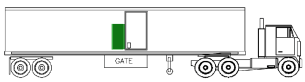

A - Green Wire
B - White Wire
C - Black Wire

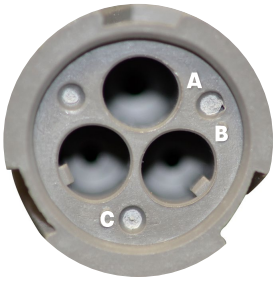

Condition / Recommended Action

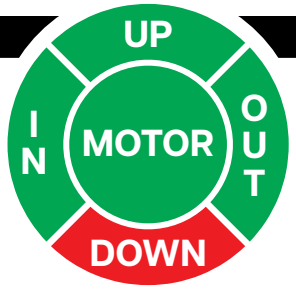

5:1

Check voltage at the test point inside the power unit on the **WHITE** wire for 12V by trying to run the gate in. If you have voltage at the **WHITE** wire at the test point, then switches and **YELLOW** wiring harness from gate to the in & out box are good.

Test Point in Power Unit Box

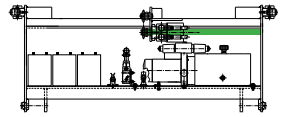

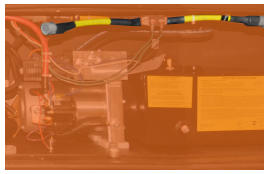

A - White Wire
B - Orange Wire
C - Red Wire
D - Black Wire
E - Green Wire



Cover



Test Point

5:2

If there is no voltage at the **WHITE** wire, check continuity from the **WHITE** wire on each side of the **YELLOW** wiring harness. Unplug the **YELLOW** wire from the outside of the gate and the outside of the in & out switch box. If you have no continuity on the **WHITE** wire change the **YELLOW** cable wiring harness.

Test Point in Power Unit Box

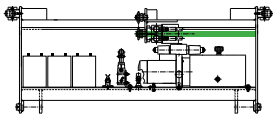

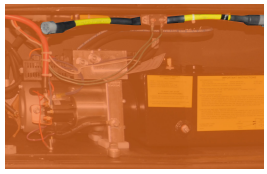

A - White Wire
B - Orange Wire
C - Red Wire
D - Black Wire
E - Green Wire



Cover



Test Point

Condition / Recommended Action

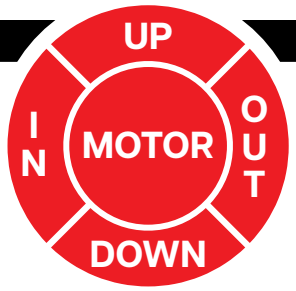

6:1

Check 20 Amp circuit breaker continuity to make sure the circuit breaker isn't bad.

Test Point in Power Unit Box

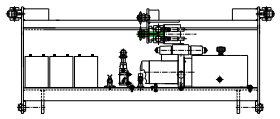

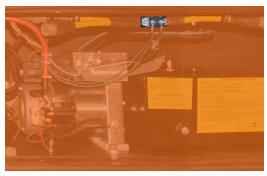

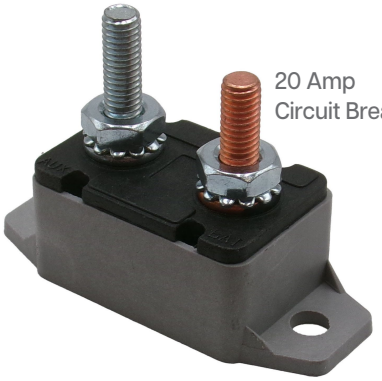

20 Amp Circuit Breaker

6:2

Check **GREEN** for power at the test point in the power unit.

Test Point in Power Unit Box

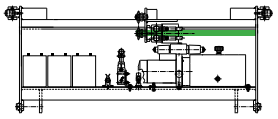

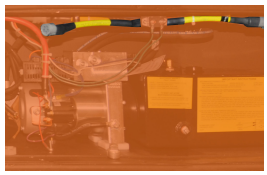

A - White Wire
B - Orange Wire
C - Red Wire
D - Black Wire
E - Green Wire



Cover



Test Point

6:3

If **NO** power at the test point, unplug the **YELLOW** wire from the outside of the gate and the outside of the in & out switch box. If you have no continuity on the **GREEN** wire change the yellow cable wiring harness.

Yellow Switch Wire and Ground

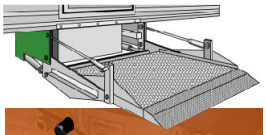

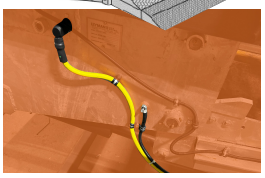

Deutsch Connection Wire Layout

White Wire
Orange Wire
Red Wire



No Connection
Black Wire
Green Wire

Condition / Recommended Action

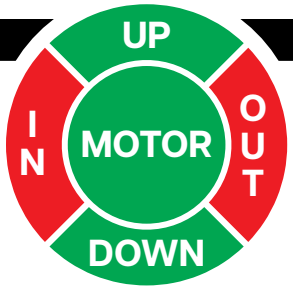

7:1

In & Out chain may be too tight. Chain should have a 1/8" to 1/4" drop in the middle of the chain when all the way out.

1/8" to 1/4"

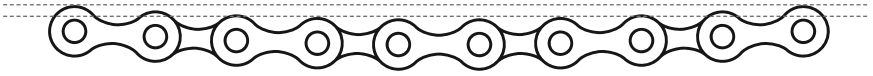

7:2

Slide pads may be too tight on the side walls of the track. Loosen slide pads then re-adjust them. To do so have the gate all the way in tighten rear pads until they hit the side wall then back out 1 full turn. Then run the gate all the way out and do the same on the front pads.

Slide Pad Adjustment

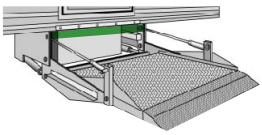

1. Run gate out all the way until it hits the front stops to adjust the front slide pads
2. Run the bolts in on each side of the gate in front until it hits the side of the track. Then back out one full turn each one.
3. Then run the gate in all the way until it hits the rear stops to adjust the rear slide pads.
4. Run the bolts in on each side of the gate in front until it hits the side of the track. Then back out one full turn each one.





7:3

Pressure setting on the in & out chain may be too low. Pressure should be between 800 and 850 PSI. Check and adjust the pressure as needed. **DO NOT ADJUST PRESSURE WITHOUT USING PRESSURE GAUGES AS THIS MAY CAUSE DAMAGE TO THE CHAIN.**

Pressure Setting Adjustment

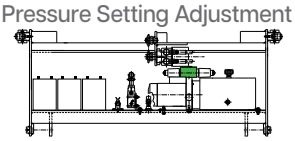

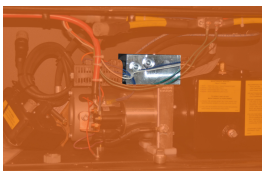

Pressure Setting Valves for In & Out Operations

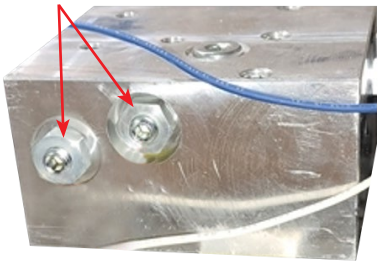

Loosen locking nut. Screw set screw in to raise pressure. Out to lower the pressure. Hold set screw in place and retighten nut after setting.

NOTES